- Picture -
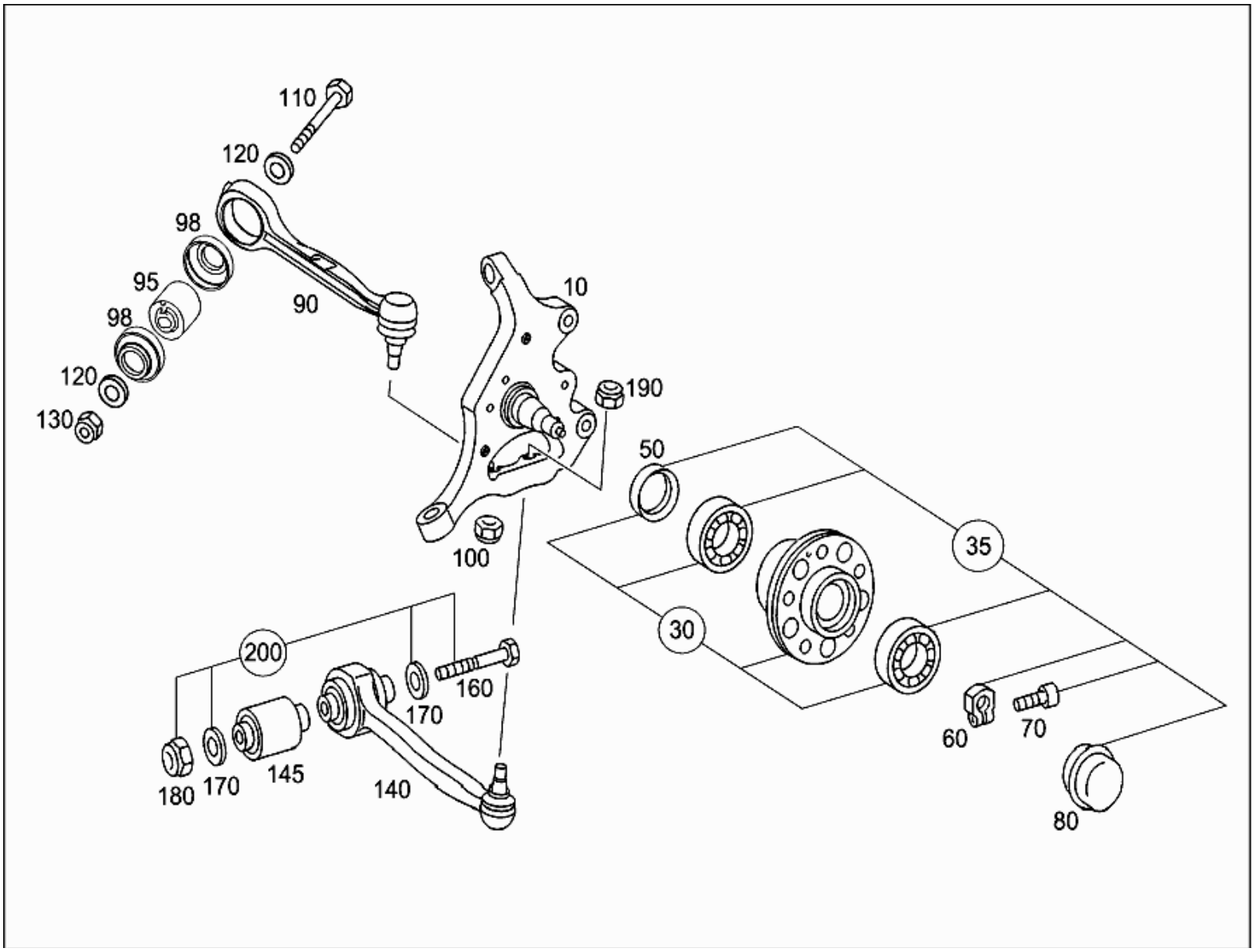
Mode :	MD mode	Mod.des.overview :	C SEDAN
FIN/MD :	WDB 2030521F914237	Catalog :	69N
VIN :	WDBRF52H37F914237	Majorassembly :	
Salesdesignation:	C 230	Majorassembly MD :	
Assortment class :	Car	Group :	33 - FRONT AXLE
Market :	North America	Subgroup :	030 - STEERING KNUCKLE AND CONTROL ARM
Picture number :	B33030000047.100604