2004 Mercedes-Benz C230

SYSTEM WIRING DIAGRAMS

Fig. 55: Charging Circuit

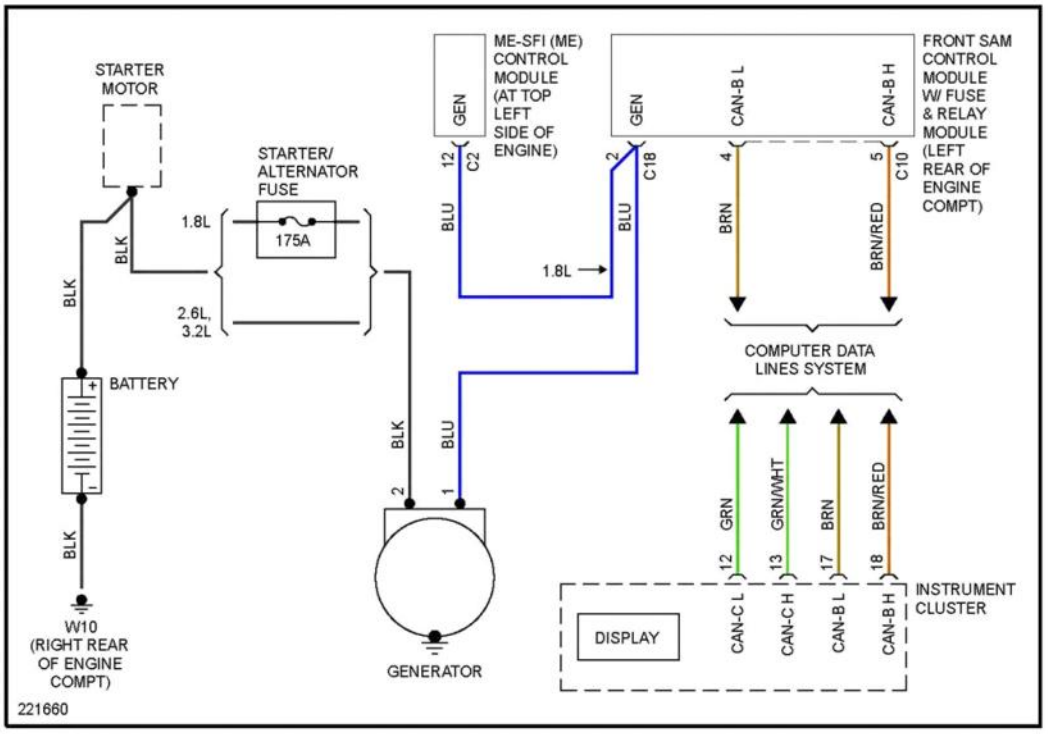

 © 2005 Mitchell Repair Information Company, LLC.