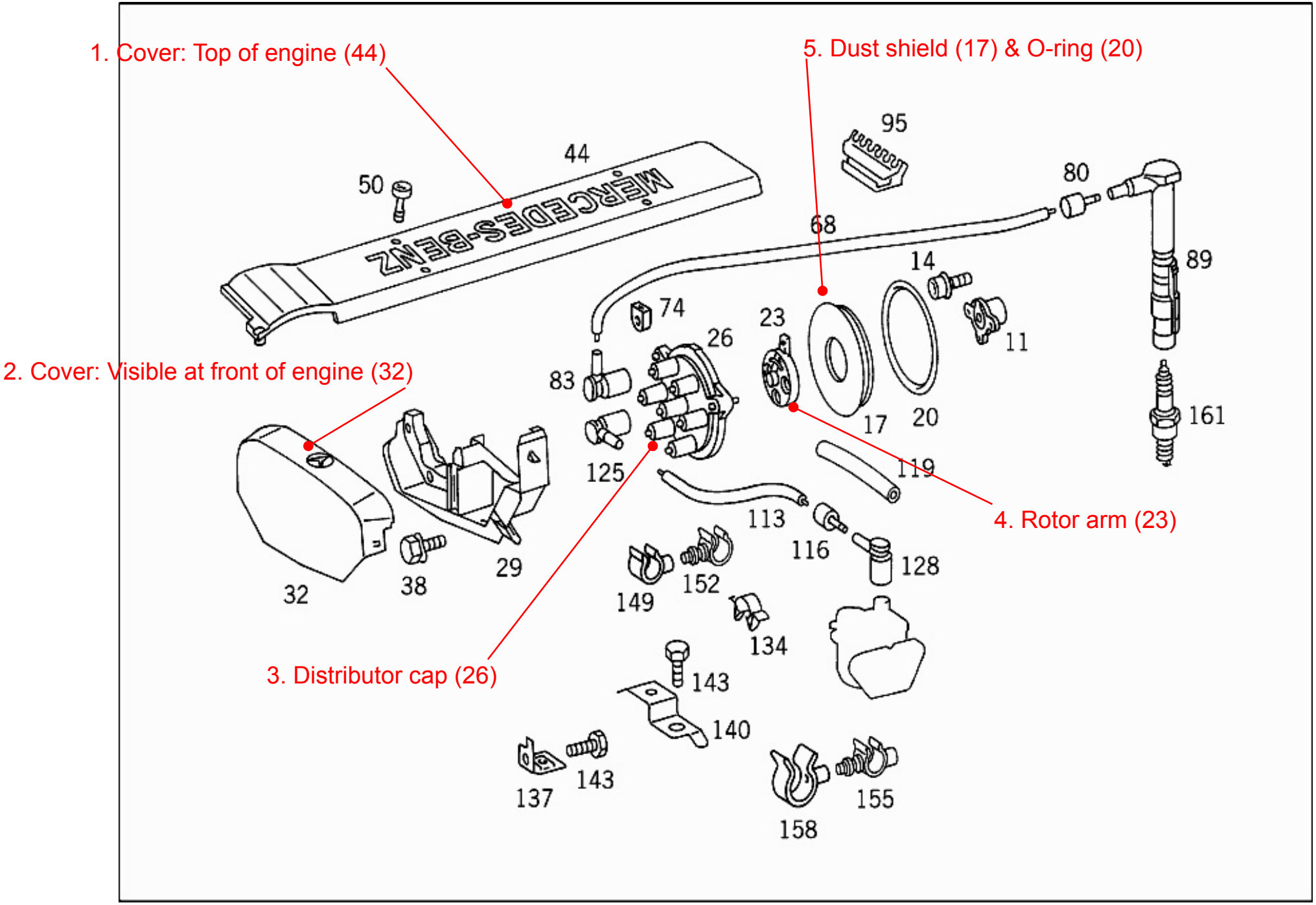M104 Series Engine: Ignition Components