SYSTEM WIRING DIAGRAMS
3.0L Diesel, Engine Performance Circuits
1995 Mercedes-Benz E300

For DIAKOM-AUTO http://www.diakom.ru Taganrog support@diakom.ru (8634)315187

Copyright © 1998 Mitchell Repair Information Company, LLC
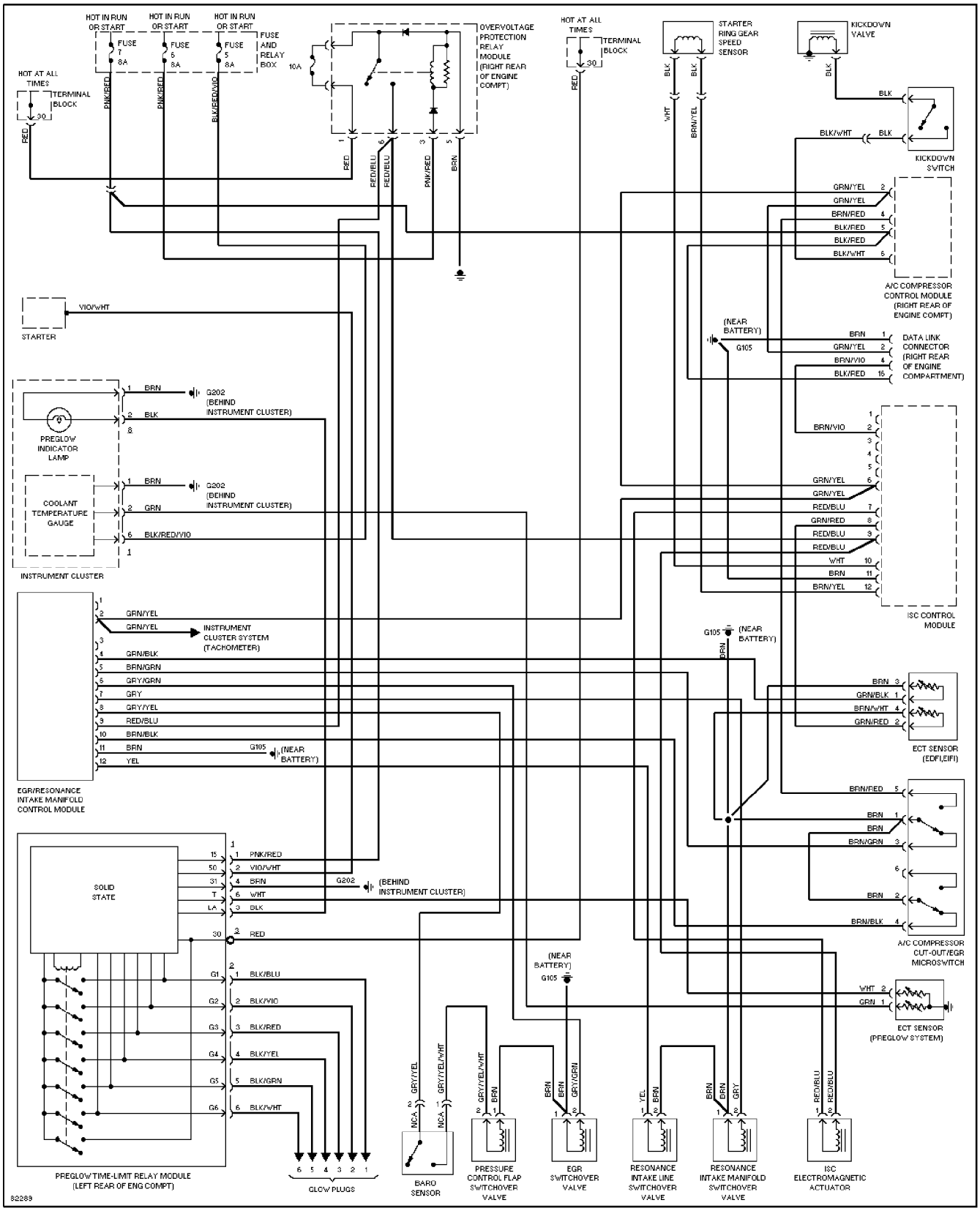
Monday, December 04, 2000 11:52AM