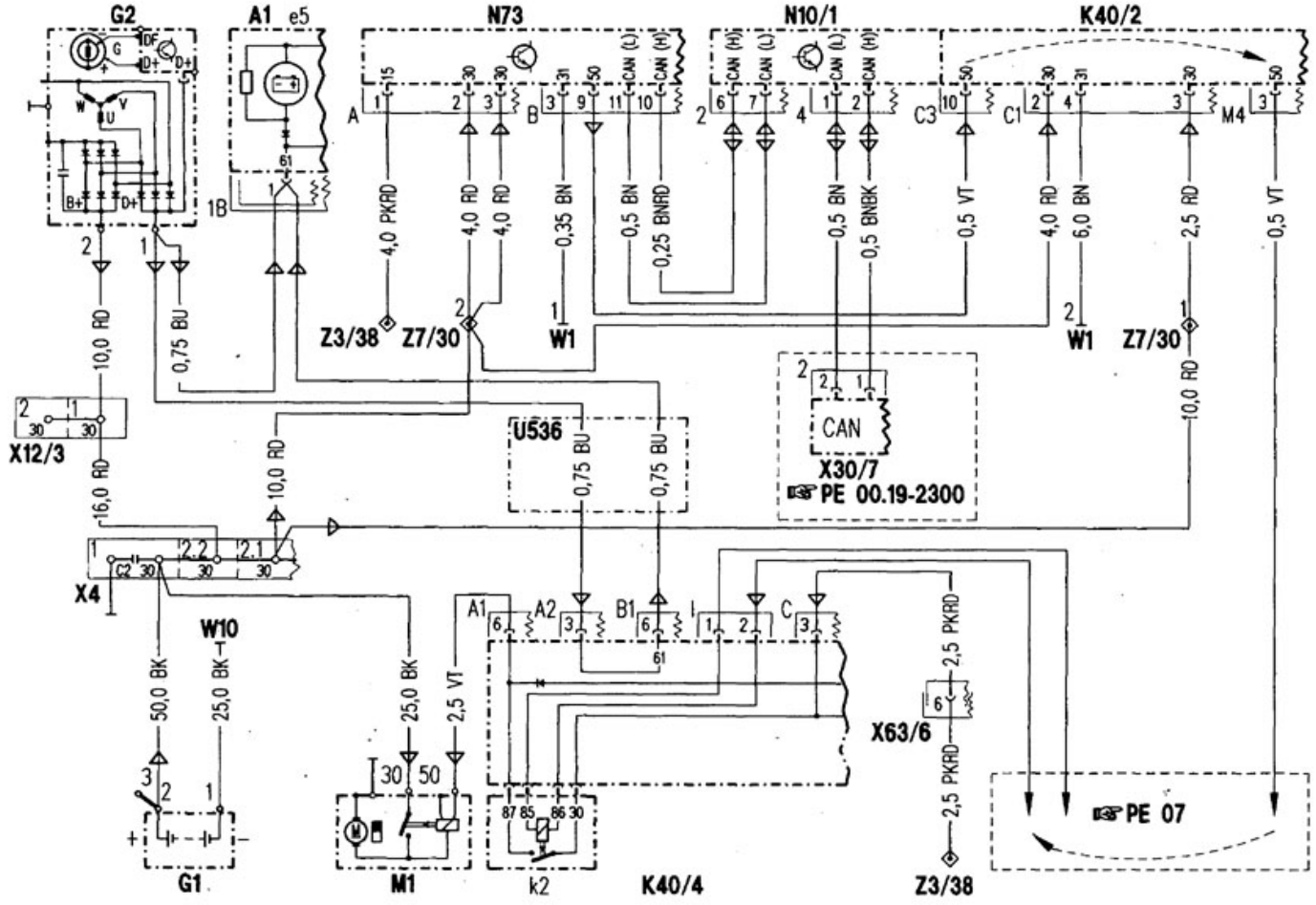

A1	Instrument cluster
A1e5	Generator charge indicator lamp
C2	Electrolytic capacitor (generator/battery harness noise suppressor)
G1	Battery
G2	Generator
K40/2	Driver-side fuse and relay module box
K40/4	Passenger-side fuse and relay module box
K40/4k2	Starter relay
M1	Starter
N10/1	Signal pickup- and activation module (SAM) left front
N73	Electronic ignition lock control module
U536	Valid for engine 112/113
U539	Valid for engine 111 ME-SFI
W1	Main ground (behind instrument cluster)
W10	Ground (battery)
X4	Terminal block (circuit 30, left footwell)
X12/3	Terminal block (circuit 30)

X30/7	Star-point coupler databus (CAN) tie-in connector
X63/6	CAN-Bus/15u connector
Z3/38	Circuit 15 (unfused) connector sleeve
Z7/30	Circuit 30 (unfused) connector sleeve
	☞ PE 00.19-2300 CAN-Bus interior
	☞ PE 07 Fuel-air mixture