- Picture -
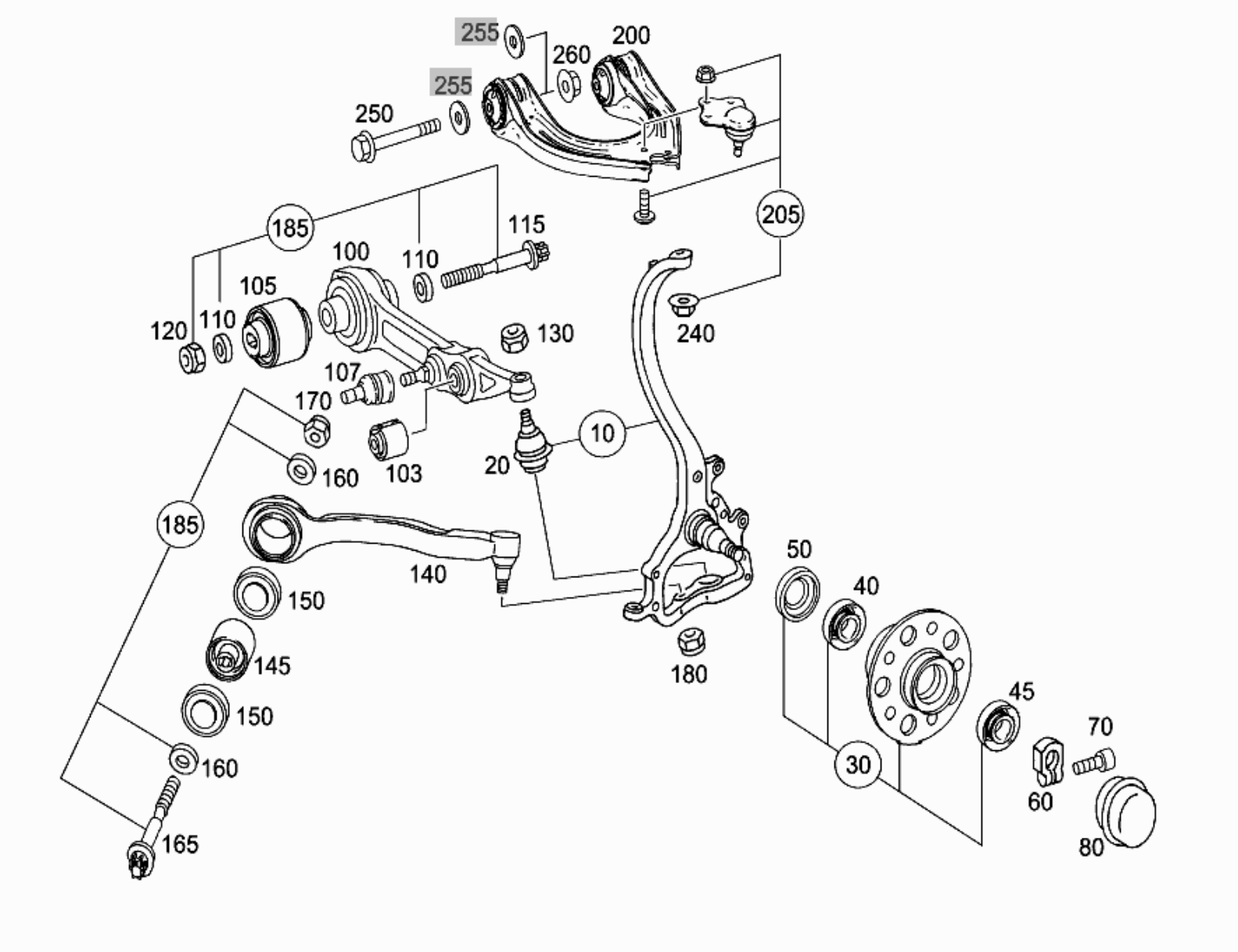
Mode	MD mode	**Mod. des. overview**	E SEDAN
FIN/MD	211026	**Catalog**	64U
VIN		**Major assembly**	
Sales designation	E 320 CDI	**Major assembly MD**	
Assortment class	Car	**Group**	33 - FRONT AXLE
Market	All	**Subgroup**	030 - STEERING KNUCKLE AND CONTROL ARM
Picture number	B33030000053.120302