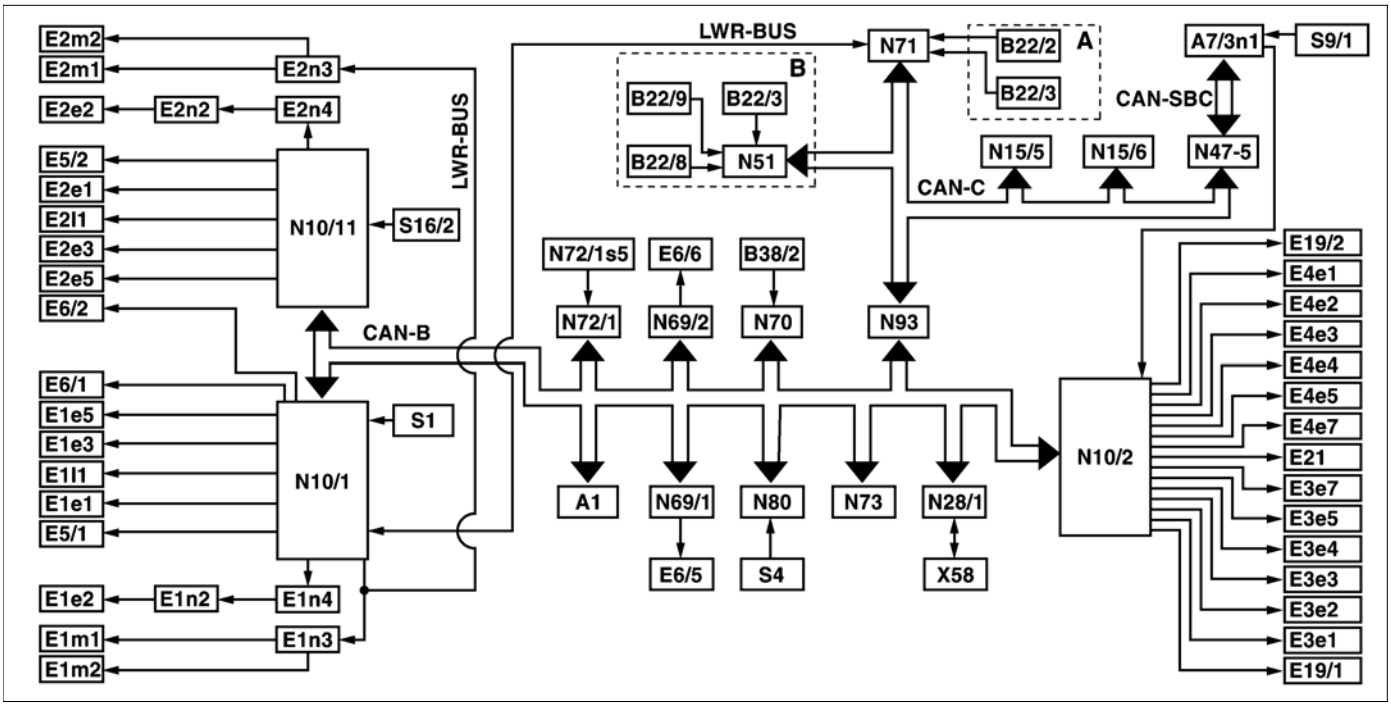

P82.10-3418-09

A1	*Instrument cluster*
A7/3n1	*SBC control unit*
B22/2	*Front axle level sensor*
B22/3	*Rear axle level sensor*
B22/8	*Left front level sensor (with code (489) Airmatic (semi-active air suspension))*
B22/9	*Right front level sensor (with code (489) Airmatic (semi-active air suspension))*
B38/2	*Rain/light sensor*
E1e1	*Left high beam*
E1e2	*Left low beam*
E1e3	*Left standing and parking lamp*
E1e5	*Left turn signal lamp*
E1l1	*Left high beam solenoid*
E1m1	*Left headlamp range adjustment motor*
E1m2	*Left dynamic curve illumination motor (with code (615) Bi-xenon headlamp unit with integrated curve illumination)*
E1n2	*Xenon headlamp ignition module*
E1n3	*HRA [LWR] power module*
E1n4	*Xenon headlamp supply module*
E2e1	*Right high beam*
E2e2	*Right low beam*
E2e3	*Right standing and parking lamp*
E2e5	*Right turn signal lamp*
E2l1	*Right high beam solenoid*
E2m1	*Right headlamp range adjustment motor*
E2m2	*Right dynamic curve illumination motor (with code (615) Bi-xenon headlamp unit with integrated curve illumination)*
E2n2	*Xenon headlamp ignition module*
E2n3	*HRA [LWR] power module*
E2n4	*Xenon headlamp supply module*
E3e1	*Outer left turn signal lamp*
E3e2	*Outer left taillamp, parking lamp, rear fog lamp*
E3e3	*Left backup lamp*
E3e4	*Left stop lamp*
E3e5	*Inner left taillamp, rear fog lampE3e7 Inner left turn signal lamp*
E4e1	*Outer right turn signal lamp*
E4e2	*Outer right taillamp, parking lamp, rear fog lamp*
E4e3	*Right backup lamp*
E4e4	*Right stop lamp*
E4e5	*Inner right taillamp, rear fog lamp*
E4e7	*Inner right turn signal lamp*
E5/1	*Left front fog lamp*
E5/2	*Right front fog lamp*
E6/1	*Left front side-marker lamp* USA *(for code (494) USA version)*
E6/2	*Right front side-marker lamp* USA *(for code (494) USA version)*
E6/5	*Left outside mirror turn signal lamp*
E6/6	*Right outside mirror turn signal lamp*
E19/1	*Left license plate lamp*
E19/2	*Right license plate lamp*
E21	*Center high-mounted stop lamp*
N10/1	*Driver-side SAM control unit with fuse and relay module*
N10/2	*Rear SAM control unit with fuse and relay module*
N10/11	*Passenger-side SAM control unit*
N15/5	*Electronic selector lever module control unit (with transmission 722)*
N15/6	*Automated manual transmission control unit (with transmission 716)*
N28/1	*Trailer connection unit [AAG] control unit (with code (550) Trailer hitch)*
N47-5	*EPS control unit*
N51	*AIRmatic with ADS control unit (with code (489) Airmatic (semi-active air suspension))*
N69/1	*Door control unit front left*
N69/2	*Door control unit front right*
N70	*Overhead control panel control unit*
N71	*Headlamp range adjustment control unit*
N72/1	*Upper control panel control unit*
N72/1s5	*Hazard warning system switch*
N73	*EIS [EZS] control unit*
N80	*Steering column module*
N93	*Central gateway control unit*
S1	*Rotary light switch*
S4	*Combination switch*
S9/1	*Stop lamp switch (4-pin)*
S16/2	*Backup lamp switch*
X58	*Trailer hitch socket, 13-pin (with code (550) Trailer hitch)*
A	*Standard*
B	*Airmatic (with code (489) Airmatic (semi-active air suspension))*
CAN B	*CAN class B bus*
CAN-C	*CAN Class C*
SBC CAN	*CAN bus for brake system*
HRA bus	*Headlamp range adjustment bus*