- Picture -
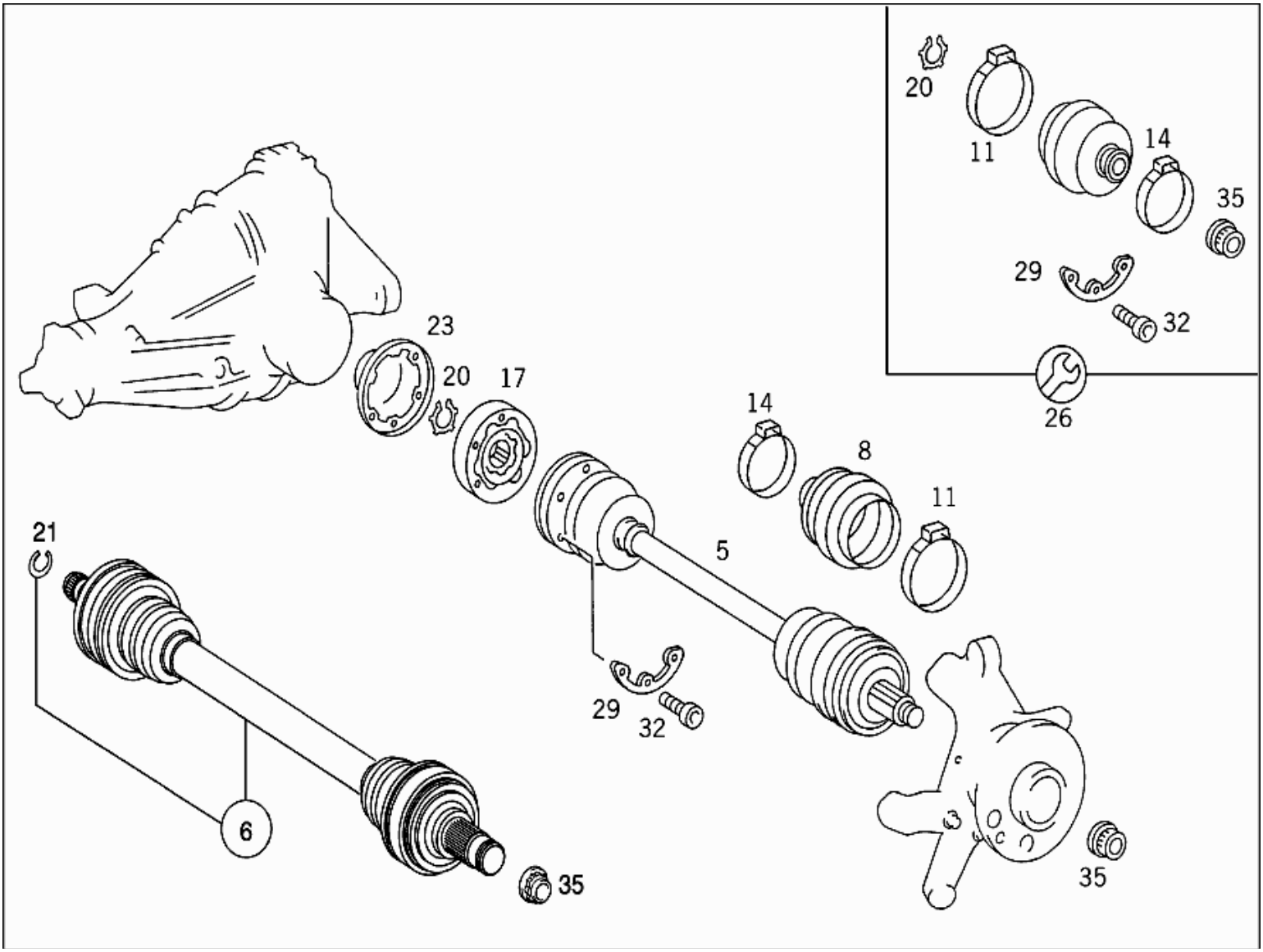
Mode:	MD mode	Mod. des. overview:	PASSSENGER CAR,COUPE
FIN/MD :	WDB 2083702F172478	Catalog:	45Y
VIN :		Major assembly:	
Salesdesignation:	CLK 430	Major assembly MD :	
Assortmentclass:	Car	Group:	35 - REAR AXLE
Market:	Standard	Subgroup:	030 - AXLE SHAFT
Picturenumber:	B35030000062.030227