2022 EQS Sedan Order Guide

Table of Contents

1	General Information
2	What's New
3	Models
4	Equipment
4.1	Standard Equipment
4.2	Exterior Paint Colors
4.3	Wheels
4.4	Interior Upholstery
4.6	Interior Trims
4.7	Packages
4.8	Options
4.9	Specifications
5	Options In Detail
6	Gallery

General Information

Important Note

The information presented in this guide is based on the most current information available and is intended for internal use only. Mercedes-Benz reserves the right to make changes at any time, without notice, to colors, materials, equipment, special specifications and models.

Pricing may not yet be finalized for some models or options.
Due to variances among monitors and printers the colors that appear on your screen and printouts may not be exact.
For illustrative purposes, some images may show vehicles with European Specification.

What's New

Sustainability Highlights

Through design and development decisions, the Model S Plaid and Model X Plaid are more sustainable than ever. Lightweight components and aerodynamic improvements increase range and reduce energy consumption. Sustainable materials and processes are used throughout the interior and exterior, including:

- Recycled aluminum
- Recycled steel
- Recycled plastic
- Recycled carpet
- Recycled glass
- Bio-based foam
- Bio-based adhesives
- Bio-based sealants
- Bio-based sound deadening
- Bio-based wiring insulation
- Bio-based tire material
- Bio-based carpet backing
- Bio-based seat cushion foam
- Bio-based seat back foam
- Bio-based headrest foam
- Bio-based seat belt webbing
- Bio-based seat belt buckle
- Bio-based seat belt tongue
- Bio-based seat belt retractor
- Bio-based seat belt anchor
- Bio-based seat belt pretensioner
- Bio-based seat belt D-ring
- Bio-based seat belt guide
- Bio-based seat belt stitching
- Bio-based seat belt tether

Models

EQS580V4 (297.144)

- MSRP: TBD
- Transmission: Automatic Transmission
- Acceleration 0 - 100 (sec): 4.3 Seconds
- Engine Configuration: Dual-Electric Motor (Front and Back)
- HP: 516 hp
- Torque (lb-ft): 630 lb-ft
- Launch Date: Fall 2021

EQS580V4

MBC Standard Equipment

- Dual Permanently Synchronous Electric Motors with 516 Hp Total Output
- 810 Burmester Surround Sound System
- 72B USB Type-C Ports
- 107.8 kWh High Voltage Battery
- 4.5 Degree Rear Axle Steering
- 436 Luxury Front Headrests
- 264 License Plate Holder
- 282 Through Loading Rear Seat
- 293 Side Air Bags - Rear
- Driving Assistance Package Plus
- 321 Fingerprint Scanner
- 852 Sensors for Anti-Theft System
- P82 Guard 360 Vehicle Protection Plus
- 500 Exterior Power Folding Mirrors
- P49 Mirror Package
- 40U Beginner Driving Mode
- P15 Electric Art Exterior
- 431 Silver Steering Wheel Shift Paddles
- U12 Velour Floor Mats
- 215 Adaptive Damping System PLUS (ADS PLUS)
- 51U Black Fabric Roof Liner
- 367 Live Traffic Information
- 365 MB Navigation
- PBG MBUX Navigation Premium
- PAF Acoustic Comfort Package
- 444 Head-up Display
- 262 Sensors in Rear for Rear (Keeping in Lane)
- 266 Active Steering Assist
- 513 Traffic Sign Assist
- P20 Driving Assistance Package Plus
- 628 Adaptive Highbeam Assist Plus
- 43U Preinstallation for Symbol Projection
- 501 360 Camera
- P47 Parking Package with 360 Camera
- 871 Foot Activated Trunk/Tailgate Release
- P17 KEYLESS GO Package
- 5B1 Compartment Storage Under Center Console incl. 1*USB
- R02 All-Season Tires
- R06 Noise Reduction Tire Foam
- B53 Acoustic Ambient Protection
- B35 Charging Cable 5m
- 81B AC Charging
- 34U Extended Connectivity Plus
- 22U MBUX Entertainment
- 16U Apple CarPlay
- 13U Preinstallation for EQ Remote and Navigation Services
- 890 EASY-PACK Power Tailgate
- 875 Heated Windshield Washer System
- 783 Radio remote control with panic switch
- 668 Sea Packing
- 536 SiriusXM Satellite Radio
- 475 Tire Pressure Monitoring System
- 443 Heated Steering Wheel
- 351 eCall System
- 294 Driver's Knee Air Bag
- 287 Split Folding Rear Seats
- 241 Power Adjustable Driver’s Seat
- PAG MBUX Hyperscreen with 12.3" Driver Display, 17.7" Central Media Display, 12.3" Passenger Display
- B35 Home Charging Cable
- 894 Ambient Lighting
- AIRMATIC Air Suspension with Adaptive Damping System
- 218 Rear View Camera
- 232 Integrated Garage Door Opener
- 476 Memory Package w/Power Steering Column
- 292 PRE-SAFE Impulse Side
- R61 20" Wheels
- 891 Active Speed Limit Assist
- 534 Connect 20 Premium
- 551 Anti-Theft Alarm System
- 587 Logo Projector Lamp (side mirrors)
- 249 Auto Dimming Mirrors (Rearview & Driver's Side)
- 41U Valet Mode
- P16 Valet Services Mode
- L2B Multifunction Steering Wheel in Nappa Leather
- 7U2 Comfort Seats
- P14 Electric Art Interior
- 489 AIRMATIC
- 502 3 Year Navigation Map Updates
- 01U Navigation Services
- 355 MBUX Extended Functions
- 596 Tinted Infrared Reflecting Glass
- 413 Panoramic Sunroof
- 243 Active Lane Keeping Assist
- 272 Evasive Manouver Support
- 233 Active Distance Assist DISTRONIC
- 546 Active Speed Limit Assist
- 324 Front Reflector Strip
- 318 DIGITAL LIGHT
- PAX Digital Light
- 235 Active Park Assist
- U19 Augmented Reality for Navigation
- 889 KEYLESS-GO
- U25 Illuminated Door Sill Panels
- 2U8 Refrigerant 1234yf
- U10 Weight Sensing System (WSS)
- B59 DYNAMIC SELECT
- B51 Tirefit
- 83B DC Charging
- 35U Connectivity and Extended Charging Plus
- 32U Personalized sound system
- 17U Google Android Auto
- 14U Smartphone Integration
- 897 Wireless Phone Charging - Front
- 876 Interior Lighting Package
- 873 Heated Front Seats
- 723 Luggage Compartment Cover
- 543 Illuminated Visor Vanity Mirrors
- 517 High Definition (HD) Radio
- 460 Canada-Specific Equipment
- 384 Communication Module
- 309 Cup Holder
- 290 Side Window Airbags
- 242 Power Adjustable Passenger’s Seat

Paint

Non-Metallic Paints

149 - Polar White

040 - Black

Metallic Paints

197 - Obsidian Black Metallic

346 - Onyx Black Metallic

595 - Nautical Blue Metallic

842 - Sodalith Blue Metallic

831 - Graphite Grey Metallic

922 - High Tech Silver Metallic

MANUFAKTUR Paints

297 - MANUFAKTUR Selenite Grey magno

996 - MANUFAKTUR Hyacinth Red Metallic

Not available with 18R Wheel

799 - MANUFAKTUR Diamond White Metallic

Code	Description	Availability	Price
149	Polar White		$0
040	Black		$0
197	Obsidian Black Metallic		$0
346	Onyx Black Metallic	All Models	$0
595	Nautical Blue Metallic	All Models	$0
842	Sodalith Blue Metallic	All Models	$0
831	Graphite Grey Metallic	All Models	$0
922	High Tech Silver Metallic	All Models	$0
297	MANUFAKTUR Selenite Grey magno		
996	MANUFAKTUR Hyacinth Red Metallic Not available with 18R Wheel		
799	MANUFAKTUR Diamond White Metallic		

Wheels

R61 - 20" Five-Spoke Aero Wheels with Black Accents

Only with Range-Optimized Summer Tires (R01)
20"
Includes R06 - Noise insulating foam for tires
255/45 R 20 on 8.5J x 20 ET 33

29R - 20" Five-Spoke Aero Wheels with Mercedes-Benz Star Pattern

Only with Range-Optimized Summer Tires (R01)
20"
Includes R06 - Noise insulating foam for tires
255/45 R 20 on 8.5J x 20 ET33

18R - 21" 10-Spoke Wheels with Energy Blue Metallic Accents

Highly recommended with Range-Optimized Summer Tires (R01) for best range. With All-Season Tires (R02), range is decreased.
21"
R01: MO, R02: MOE Run-Flat
Includes R06 - Noise insulating foam for tires
265/40 R 21 on 9.5J x 21 ET 41.5

RWX - 21" AMG Multispoke with Black Accents

Highly recommended with Range-Optimized Summer Tires (R01) for best range. With All-Season Tires (R02), range is decreased.
21"
R01: MO, R02: MOE Run-Flat
Includes R06 - Noise insulating foam for tires
265 / 40 R 21 on 9.5J x 21 ET 41.5

RWY - 21" AMG Multispoke with Black Accents

Highly recommended with Range-Optimized Summer Tires (R01) for best range. With All-Season Tires (R02), range is decreased.
21"
R01: MO, R02: MOE Run-Flat
Includes R06 - Noise insulating foam for tires
265/40 R 21 on 9.5 J x 21 ET 41.5

00R - 22" 5-Twin Spoke Wheels with Black Accents

Only with Range-Optimized Summer Tires (R01)
22"
Includes R06 - Noise insulating foam for tires
265/35 R 22 on 9.5J x 22 ET 41.5

Code	*Wheel Size*	*Description*	*Wheel Dimensions*	*Mobility*	*Availability*	*MSRP*
R61	20"	Includes R06 - Noise insulating foam for tires Only with Range-Optimized Summer Tires (R01)	255/45 R 20 on 8.5J x 20 ET 33		All Models	$0
29R	20"	Includes R06 - Noise insulating foam for tires Only with Range-Optimized Summer Tires (R01)	255/45 R 20 on 8.5J x 20 ET33		All Models	$0
18R	21"	Includes R06 - Noise insulating foam for tires Highly recommended with Range-Optimized Summer Tires (R01) for best range. With All-Season Tires (R02), range is decreased.	265/40 R 21 on 9.5J x 21 ET 41.5	R01: MO, R02: MOE Run-Flat	All Models	$0
RWX	21"	Includes R06 - Noise insulating foam for tires Highly recommended with Range-Optimized Summer Tires (R01) for best range. With All-Season Tires (R02), range is decreased.	265 / 40 R 21 on 9.5J x 21 ET 41.5	R01: MO, R02: MOE Run-Flat	All Models	$0
RWY	21"	Includes R06 - Noise insulating foam for tires Highly recommended with Range-Optimized Summer Tires (R01) for best range. With All-Season Tires (R02), range is decreased.	265/40 R 21 on 9.5 J x 21 ET 41.5	R01: MO, R02: MOE Run-Flat	All Models	$0
00R	22"	Includes R06 - Noise insulating foam for tires Only with Range-Optimized Summer Tires (R01)	265/35 R 22 on 9.5J x 22 ET 41.5		All Models	$0

Upholstery

MANUFAKTUR Nappa Leather

509 - MANUFAKTUR Neva Grey / Biscaya Blue Nappa Leather

Only available with Premium Package (DP1) + Exclusive Nappa Leather Package (P87)
Not available with Sport Interior (DS2) and/or MANUFAKTUR Hyacinth Red Metallic Paint (996)

519 - Edition One MANUFAKTUR Neva Grey / Reflex Blue Nappa Leather

Only available on the Edition 1

Nappa Leather

801 - Black / Space Grey Nappa Leather

Requires Premium Package (DP1)
Not available with Sport Interior (DS2)

805 - Macchiato Beige / Space Grey Nappa Leather

Requires Premium Package (DP1)
Not available with Sport Interior (DS2)

811 - Black / Balao Brown Nappa Leather

Requires Premium Package (DP1)
Not available with Sport Interior (DS2)

Leather

201 - Black / Space Grey Leather

205 - Macchiato Beige / Space Grey Leather

209 - Neva Grey / Balao Brown Leather

211 - Black / Balao Brown Leather

229 - Neva Grey / Balao Brown

Requires Sport Interior (DS2)
Seats feature Digital Rain perforation pattern

231 - Black / Space Grey Leather with Red Stitching Accents

Requires Sport Interior (DS2)
Upper dashboard and armrests feature red stitching elements.
Seats feature Digital Rain perforation pattern

Code	Description	Availability	Price
509	MANUFAKTUR Neva Grey / Biscaya Blue Nappa Leather	All Models	
519	Edition One MANUFAKTUR Neva Grey / Reflex Blue Nappa Leather	All Models	$0
801	Black / Space Grey Nappa Leather	All Models	
805	Macchiato Beige / Space Grey Nappa Leather	All Models	
811	Black / Balao Brown Nappa Leather	All Models	
201	Black / Space Grey Leather		$0
205	Macchiato Beige / Space Grey Leather	All Models	$0
209	Neva Grey / Balao Brown Leather	All Models	$0
211	Black / Balao Brown Leather	All Models	$0
229	Neva Grey / Balao Brown	All Models	$0
231	Black / Space Grey Leather with Red Stitching Accents	All Models	$0

Code	Upholstery	Seats	Floor Mats	Upper Dash/Lower Dash	Seat Belts	Steering Wheel	Headliner
509	MANUFAKTUR Neva Grey / Biscaya Blue Nappa Leather	Neva Grey	Neva Grey	Biscaya Blue Nappa-Optic Upper with Rose Gold Stitching / Neva Grey MB-Tex Lower	Neva Grey	Neva Grey	69U Grey Microfiber Headliner
519	Edition One MANUFAKTUR Neva Grey / Reflex Blue Nappa Leather	Neva Grey	Neva Grey	Stratos Blue Nappa-Optic Upper with Rose Gold Stitching / Neva Grey MB-Tex Lower	Neva Grey	Neva Grey	69U Grey Microfiber Headliner
801	Black / Space Grey Nappa Leather	Black	Black	Space Grey Neotex Upper with Rose Gold Stitching / Black MB-Tex Lower	Black	Black	51U Black Fabric Headliner
805	Macchiato Beige / Space Grey Nappa Leather	Macchiato Beige	Space Grey	Space Grey Neotex Upper with Rose Gold Stitching / Macchiato Beige MB-Tex Lower	Macchiato Beige	Macchiato Beige	55U Macchiato Beige Cloth Headliner
811	Black / Balao Brown Nappa Leather	Black	Black	Sable Brown Neotex Upper with Rose Gold Stitching / Black MB-Tex Lower	Black	Black	51U Black Fabric Headliner
201	Black / Space Grey Leather	Black	Black	Space Grey Neotex Upper / Black MB-Tex Lower	Black	Black	51U Black or 61U Black Microfiber
205	Macchiato Beige / Space Grey Leather	Macchiato Beige	Space Grey	Space Grey Neotex Upper / Macchiato Beige MB-Tex	Macchiato Beige	Macchiato Beige	55U Macchiato Beige
209	Neva Grey / Balao Brown Leather	Neva Grey	Balao Brown	Balao Brown Neotex Upper / Neva Grey MB-Tex Lower	Neva Grey	Neva Grey	59U - Grey or 69U Grey Microfiber
211	Black / Balao Brown Leather	Black	Black	Balao Brown Neotex Upper / Black MB-Tex Lower	Black	Black	51U Black or 61U Black Microfiber
229	Neva Grey / Balao Brown	Neva Grey	Balao Brown	Balao Brown Neotex Upper / Neva Grey MB-Tex Lower	Neva Grey	Neva Grey	59U Grey or 69U Grey Microfiber
231	Black / Space Grey Leather with Red Stitching Accents	Black	Black	Space Grey Neotex Upper / Black MB-Tex Lower with Microfiber Accents	Black	Black	51U Black or 61U Black Microfiber

Trims

H08 - Natural Grain Anthracite Linden Wood Dashboard and Door Trim

In combination with MBUX Hyperscreen, includes code 775 for matching center console

H12 - Brown Open-Pore Walnut Wood Dashboard and Door Trim

In combination with MBUX Hyperscreen, includes code 798 for matching center console

H39 - Ship's deck open-pore walnut trim

In combination with MBUX Hyperscreen, includes code 697 for matching center console

Code	*Description*	*Availability*	*Price*
H08	Natural Grain Anthracite Linden Wood Dashboard and Door Trim In combination with MBUX Hyperscreen, includes code 775 for matching center console	All Models	
H12	Brown Open-Pore Walnut Wood Dashboard and Door Trim In combination with MBUX Hyperscreen, includes code 798 for matching center console	All Models	
H39	Ship's deck open-pore walnut trim In combination with MBUX Hyperscreen, includes code 697 for matching center console	All Models	

Packages

Code	Packages	Availability	MSRP
DP1	Premium Package Includes all Standard Equipment. Highlights include: ■ 401 - Climate Comfort Front Seats ■ PDD - Global Equipment Level Code ■ P21 - Air Balance Package ■ 902 - Seat Heating Plus ■ 444 - Head-Up Display ■ 581 - THERMOTRONIC Automatic Climate Control ■ 216 - 10˚ Rear Axle Steering ■ 399 - Multicontour Front Seats with Massage	All Models	
DS1	Sport Package Not with DN1 (Night Package) ■ 5U4 - Star Panel Grille ■ RWX - 21" AMG Multi-Spoke Wheels with Black Accents ■ 772 - AMG Styling Package ■ P31 - AMG Line exterior	All Models	
DN1	Night Package Not with DS1 (Sport Package) ■ P31 - AMG Line exterior ■ 772 - AMG Styling Package ■ RWX - 21" AMG Multi-Spoke Wheels with Black Accents ■ P55 - Night Package ■ U50 - Omission of Heat Insulating dark-tinted Glass	All Models	
DS2	Sport Interior Package Only with DS1 or DN1, not available with Nappa Leather ■ P29 - AMG Line interior ■ 7U4 - AMG Line Sport Comfort Seat with Integrated Headrests and Ambient Lighting ■ L5C - Multifunction Sport Steering Wheel ■ U26 - AMG Velour Floor Mats	All Models	
D01	Premium Rear Seating Package ■ 437 - Luxury Rear Head Restraints ■ 898 - Wireless Phone Charging - Rear ■ 223 - Electrically Adjustable Rear Seats ■ 402 - Climate Comfort Rear Seats ■ 293 - Side Air Bags - Rear ■ 326 - Comfort Rear Armrests ■ PAS - Rear Seat Package	All Models	
D02	Executive Rear Seating Package Not with: DO1, 209A, 229A, 509A, 519A, 859A ■ 402 - Climate Comfort Rear Seats ■ 293 - Side Air Bags - Rear ■ 322 - Neck Warmer ■ 903 - Enhanced Heated Rear Seats ■ 898 - Rear Seat Entertainment Plus ■ 437 - Luxury Rear Head Restraints ■ P43 - Rear Multicontour Seats ■ 326 - Comfort Rear Armrests ■ 223 - Electrically Adjustable Rear Seats ■ 447 - Rear Seat Package Plus ■ 406 - Multicontour Rear Seats	All Models	

Options

Factory Options

Code	Options	Availability	MSRP
21U	Dashcam		
P53	ENERGIZING AIR CONTROL Plus (Includes Hepa Filter)		
P87	Exclusive Nappa Leather Package Only with DP1, Includes: 509A, 561, H39, 59U		
306	Rear Seatbelt Bags Not possible with: 205A, 209A, 229A, 509A, 519A, 805A, 859A		
77B	MBUX Interior Assistant Not possible with 509A, 519A, 209A, 859A		
445	MBUX Augmented Reality Head-Up Display Replaces 444 (Head-up Display), Only with Hyoerscreen (PAG)		
597	Windshield Heater		

Specifications

EQS580V4

Chassis	
Drivetrain	
Transmission	Automatic Transmission
Drive Configuration	All-wheel Drive
Engine	
Engine Configuration	Dual-Electric Motor (Front and Back)
HP	516 hp
Torque (lb-ft)	630 lb-ft
AC and DC Charging	AC: up to 9.6 kW DC: up to 200 kW
EPA Range	TBA
Performance	
Acceleration 0 - 100 (sec)	4.3 Seconds
Top Speed (km/h)	210 km/h (Electronically Limited)
Exterior Dimensions	
Vehicle Length (mm)	5,265
Vehicle Height (mm)	1,513
Vehicle Width w/ exterior mirrors (mm)	1,926
Wheelbase (mm)	3,210
Curb Weight (lbs)	5,698
Track Width Front/Rear (mm)	1,667/1,682
Wheels and Tires	
Interior Dimensions	
Trunk Size (cubic feet)	610 Liters 1,770 Liters (Seats Folded Down)

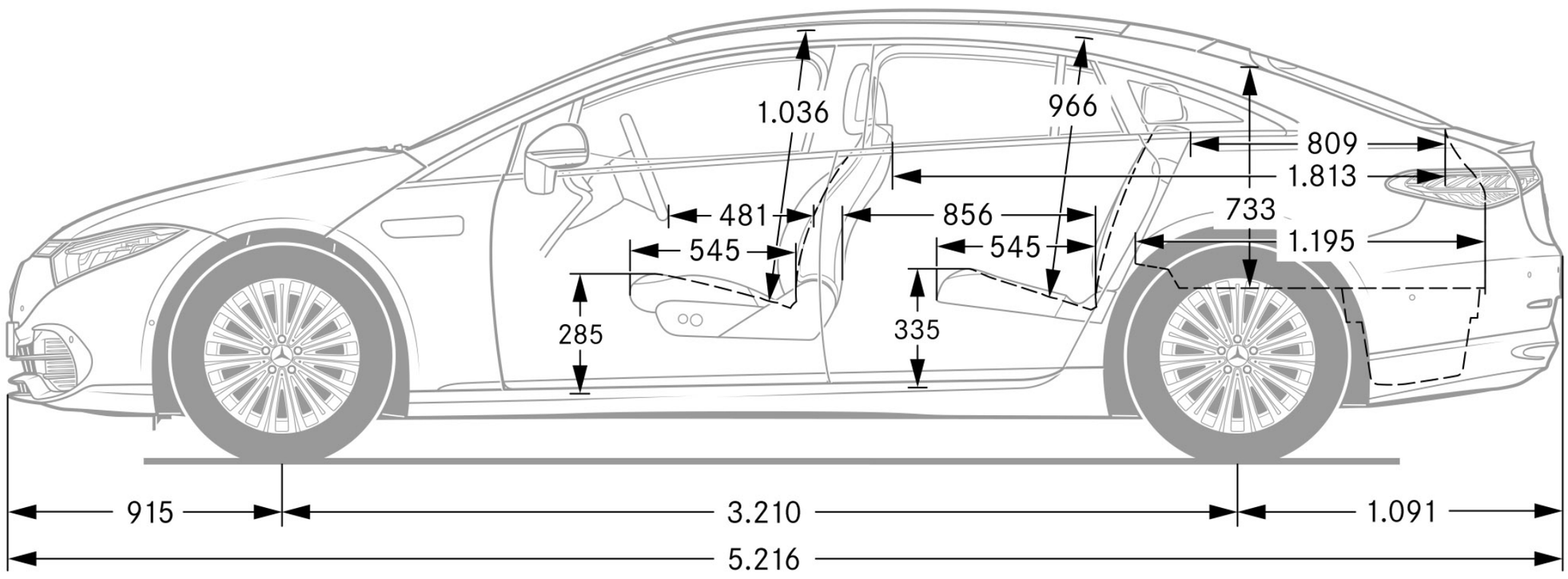

Gallery