2022 EQS Sedan Order Guide

Table of Contents

1	General Information
2	What's New
3	Models
4	Equipment
4.1	Standard Equipment
4.2	Exterior Paint Colors
4.3	Wheels
4.4	Interior Upholstery
4.6	Interior Trims
4.7	Packages
4.8	Options
4.9	Specifications
5	Options In Detail
6	Gallery

General Information

Important Note

The information presented in this guide is based on the most current information available and is intended for internal use only. Mercedes-Benz reserves the right to make changes at any time, without notice, to colors, materials, equipment, special specifications and models.

Pricing may not yet be finalized for some models or options.
Due to variances among monitors and printers the colors that appear on your screen and printouts may not be exact.
For illustrative purposes, some images may show vehicles with European Specification.

What's New

Sustainability Highlights

Through design and development processes, the Porsche Taycan has been optimized for sustainability. Lightweight construction, energy efficient components and a high level of recyclability are the main focus points. The Taycan is the first Porsche model to be produced with a CO2 neutral balance sheet. Porsche AG is committed to the Paris climate agreement and has set itself the goal of reducing its CO2 emissions by 30 percent by 2030 compared to 2018.

- Lightweight construction
- Energy efficient components
- Recyclability
- Sustainable production
- Sustainable supply chain
- Sustainable mobility

Exterior Design Highlights

The Porsche Taycan Turbo and Turbo S are equipped with the Porsche Active Aerodynamics (PAA). Depending on the driving situation, the PAA adjusts the ride height and the position of the front and rear flaps. This reduces the drag coefficient and increases the vehicle's stability and agility.

Front Flaps: Adjustable front flaps are located in the front bumper. They are used to optimize the cooling of the front brakes and to reduce the drag coefficient.

Rear Flaps: Adjustable rear flaps are located in the rear bumper. They are used to optimize the cooling of the rear brakes and to reduce the drag coefficient.

Ride Height: The ride height can be adjusted by the PAA in order to improve aerodynamic stability, reduce drag and improve ground clearance.

Exterior Colors: Taycan is available in 14 exterior colors, including 3 new colors: Gentian Blue Metallic, Mahogany Metallic and Frozen Blue Metallic.

Wheel Designs: Taycan is available with 19 different wheel designs, including 3 new designs: Taycan Aerodynamic, Taycan Sport Design and Taycan Turbo Design.

Light Design: The Taycan's front and rear lights are equipped with Porsche's signature design elements. The front lights feature a four-point design, while the rear lights feature a three-point design.

Aerodynamics: The Taycan's aerodynamic design has been optimized to reduce drag and improve stability. The PAA system adjusts the ride height and the position of the front and rear flaps to optimize the vehicle's aerodynamics.

Edition 1 Features Highlights

Exterior

Paint Finish
Gentian Blue Metallic
Mahogany Metallic
Frozen Blue Metallic

Wheels
19" Taycan Aerodynamic
19" Taycan Sport Design
19" Taycan Turbo Design

Brake Calipers
Black Brake Calipers
Red Brake Calipers
Silver Brake Calipers

Interior

Seat Upholstery
Black Leather
Black/Graphite Blue Leather
Black/Cognac Leather
Black/Slate Grey Leather
Black/Mahogany Leather
Black/Frozen Blue Leather
Black/Slate Grey Alcantara
Black/Mahogany Alcantara
Black/Frozen Blue Alcantara

Standard Features Highlights

800 V Hypervoltage

Available in Models: Taycan 4S, Taycan GTS, Taycan Turbo, Taycan Turbo S

Description: 800 V Hypervoltage is a technology that allows for faster charging times and more efficient energy transfer. The Taycan is the first production vehicle to utilize this technology, which allows for a charging time of 5 minutes for a range of 100 miles.

Active Ambient Lighting and Welcome Animation

Available in Models: Taycan 4S, Taycan GTS, Taycan Turbo, Taycan Turbo S

Description: Active Ambient Lighting and Welcome Animation are features that allow the driver to customize the ambient lighting in the vehicle and to see a welcome animation when the vehicle is unlocked. The ambient lighting can be adjusted to different colors and intensities, and the welcome animation can be customized to display different patterns and colors.

Auto Lock Functions & 12 Degrees Reverse Parking Assistance

Available in Models: Taycan 4S, Taycan GTS, Taycan Turbo, Taycan Turbo S

Description: Auto Lock Functions and 12 Degrees Reverse Parking Assistance are features that allow the driver to lock the vehicle automatically when the driver leaves the vehicle and to park the vehicle in reverse at a 12 degree angle.

Digital Light

Available in Models: Taycan 4S, Taycan GTS, Taycan Turbo, Taycan Turbo S

Description: Digital Light is a feature that allows the driver to customize the lighting in the vehicle by adjusting the color and intensity of the lights. The lights can be adjusted to different colors and intensities, and the driver can create different lighting scenes for different situations.

ABRAXAS

Available in Models: Taycan 4S, Taycan GTS, Taycan Turbo, Taycan Turbo S

Description: ABRAXAS is a feature that allows the driver to customize the vehicle's interior with different materials and colors. The driver can choose from a variety of materials and colors for the seats, dashboard, and other interior components.

Recuperation

Available in Models: Taycan 4S, Taycan GTS, Taycan Turbo, Taycan Turbo S

Description: Recuperation is a feature that allows the vehicle to recover energy from the braking system and use it to charge the battery. The amount of energy recovered can be adjusted by the driver to suit their driving style and the conditions of the road.

Fingerprint Scanner

Available in Models: Taycan 4S, Taycan GTS, Taycan Turbo, Taycan Turbo S

Description: The fingerprint scanner is a feature that allows the driver to unlock the vehicle and start the engine by scanning their fingerprint. The scanner can be programmed to recognize up to 10 different fingerprints.

Navigation with Electric Intelligence

Available in Models: Taycan 4S, Taycan GTS, Taycan Turbo, Taycan Turbo S

Description: Navigation with Electric Intelligence is a feature that allows the driver to plan their route and charge their vehicle at the most efficient charging stations. The system takes into account the vehicle's range, the driver's preferences, and the availability of charging stations to provide the most efficient route.

BOSE Sound

Available in Models: Taycan 4S, Taycan GTS, Taycan Turbo, Taycan Turbo S

Description: The BOSE sound system is a high-quality audio system that provides a rich and immersive listening experience. The system includes a variety of speakers and subwoofers that are strategically placed throughout the vehicle to provide a balanced and clear sound.

Accessory Comfort Package (FAT)

Available in Models: Taycan 4S, Taycan GTS, Taycan Turbo, Taycan Turbo S

Description: The Accessory Comfort Package (FAT) is a package that includes a variety of accessories that are designed to enhance the comfort and convenience of the driver and passengers. The package includes the following accessories:

- Heated front seats
- Heated rear seats
- Heated steering wheel
- Ventilated front seats
- Ventilated rear seats
- Heated cup holders
- Heated armrests
- Heated door panels
- Heated rear seat armrests
- Heated rear seat cup holders
- Heated rear seat door panels

Safety

Night Vision Assistant: Porsche's Night Vision Assistant is a feature that uses a thermal camera to detect pedestrians and animals in the dark and alert the driver to their presence. The system can also provide a warning to the driver if it detects a potential collision with a pedestrian or animal.

Lane Change Assistant: The Lane Change Assistant is a feature that uses cameras and sensors to detect vehicles in the adjacent lanes and provide a warning to the driver if it detects a potential collision when changing lanes. The system can also provide a warning to the driver if it detects a vehicle in the blind spot.

Adaptive Cruise Control: Adaptive Cruise Control is a feature that uses cameras and sensors to maintain a set distance from the vehicle in front and adjust the speed of the vehicle to maintain the set distance. The system can also provide a warning to the driver if it detects a potential collision with the vehicle in front.

Lane Keeping Assistant: The Lane Keeping Assistant is a feature that uses cameras and sensors to detect the lane markings and provide a warning to the driver if it detects a potential lane departure. The system can also provide a gentle steering intervention to keep the vehicle in the lane.

Traffic Jam Assistant: The Traffic Jam Assistant is a feature that uses cameras and sensors to detect the vehicle in front and provide a warning to the driver if it detects a potential collision with the vehicle in front. The system can also provide a gentle braking intervention to avoid the collision.

Traffic Sign Recognition: The Traffic Sign Recognition is a feature that uses cameras and sensors to detect the traffic signs and provide a warning to the driver if it detects a potential violation of the traffic signs. The system can also provide a gentle steering intervention to avoid the violation.

Emergency Braking Assistant: The Emergency Braking Assistant is a feature that uses cameras and sensors to detect the vehicle in front and provide a warning to the driver if it detects a potential collision with the vehicle in front. The system can also provide a gentle braking intervention to avoid the collision.

Adaptive Cruise Control with Stop & Go: Adaptive Cruise Control with Stop & Go is a feature that uses cameras and sensors to maintain a set distance from the vehicle in front and adjust the speed of the vehicle to maintain the set distance. The system can also provide a warning to the driver if it detects a potential collision with the vehicle in front. The system can also provide a gentle braking intervention to avoid the collision.

Lane Change Assistant: The Lane Change Assistant is a feature that uses cameras and sensors to detect vehicles in the adjacent lanes and provide a warning to the driver if it detects a potential collision when changing lanes. The system can also provide a warning to the driver if it detects a vehicle in the blind spot.

Night Vision Assistant: The Night Vision Assistant is a feature that uses a thermal camera to detect pedestrians and animals in the dark and alert the driver to their presence. The system can also provide a warning to the driver if it detects a potential collision with a pedestrian or animal.

Driving Assistance Package

Available in Models: Taycan 4S, Taycan GTS, Taycan Turbo, Taycan Turbo S

Price: $2,500

Driver Assistance Functions (Standard):

- Adaptive Cruise Control with Stop & Go
- Lane Change Assistant
- Night Vision Assistant
- Traffic Sign Recognition
- Emergency Braking Assistant
- Lane Keeping Assistant
- Traffic Jam Assistant
- Adaptive Cruise Control
- Lane Change Assistant
- Night Vision Assistant

Driver Assistance Functions (Optional):

- Adaptive Cruise Control with Stop & Go
- Lane Change Assistant
- Night Vision Assistant
- Traffic Sign Recognition
- Emergency Braking Assistant
- Lane Keeping Assistant
- Traffic Jam Assistant
- Adaptive Cruise Control
- Lane Change Assistant
- Night Vision Assistant

Driver Assistance Functions (Optional):

- Adaptive Cruise Control with Stop & Go
- Lane Change Assistant
- Night Vision Assistant
- Traffic Sign Recognition
- Emergency Braking Assistant
- Lane Keeping Assistant
- Traffic Jam Assistant
- Adaptive Cruise Control
- Lane Change Assistant
- Night Vision Assistant

Lane Change Assistant: The Lane Change Assistant is a feature that uses cameras and sensors to detect vehicles in the adjacent lanes and provide a warning to the driver if it detects a potential collision when changing lanes. The system can also provide a warning to the driver if it detects a vehicle in the blind spot.

Night Vision Assistant: The Night Vision Assistant is a feature that uses a thermal camera to detect pedestrians and animals in the dark and alert the driver to their presence. The system can also provide a warning to the driver if it detects a potential collision with a pedestrian or animal.

Bolt Setup

Available in Models: Taycan 4S, Taycan GTS, Taycan Turbo, Taycan Turbo S

Description: The Bolt Setup is a feature that allows the driver to customize the vehicle's interior with different materials and colors. The driver can choose from a variety of materials and colors for the seats, dashboard, and other interior components.

Powertrain

Motor:
Taycan 4S: 2 x 190 kW (258 PS) = 380 kW (516 PS) Peak Power, 2 x 1,500 Nm (1,106 lb-ft) Peak Torque
Taycan GTS: 2 x 190 kW (258 PS) = 380 kW (516 PS) Peak Power, 2 x 1,500 Nm (1,106 lb-ft) Peak Torque
Taycan Turbo: 2 x 190 kW (258 PS) = 380 kW (516 PS) Peak Power, 2 x 1,500 Nm (1,106 lb-ft) Peak Torque
Taycan Turbo S: 2 x 190 kW (258 PS) = 380 kW (516 PS) Peak Power, 2 x 1,500 Nm (1,106 lb-ft) Peak Torque

Battery:
Taycan 4S: 93.4 kWh (89 kWh usable)
Taycan GTS: 93.4 kWh (89 kWh usable)
Taycan Turbo: 93.4 kWh (89 kWh usable)
Taycan Turbo S: 93.4 kWh (89 kWh usable)

Charging:
Taycan 4S: 11 kW AC, 270 kW DC
Taycan GTS: 11 kW AC, 270 kW DC
Taycan Turbo: 11 kW AC, 270 kW DC
Taycan Turbo S: 11 kW AC, 270 kW DC

Range:
Taycan 4S: 463 km (288 miles)
Taycan GTS: 463 km (288 miles)
Taycan Turbo: 463 km (288 miles)
Taycan Turbo S: 463 km (288 miles)

Performance:
Taycan 4S: 0-100 km/h (0-62 mph) in 4.0 seconds
Taycan GTS: 0-100 km/h (0-62 mph) in 3.8 seconds
Taycan Turbo: 0-100 km/h (0-62 mph) in 3.2 seconds
Taycan Turbo S: 0-100 km/h (0-62 mph) in 2.8 seconds

Chassis:
Taycan 4S: Rear-wheel drive
Taycan GTS: Rear-wheel drive
Taycan Turbo: All-wheel drive
Taycan Turbo S: All-wheel drive

Suspension:
Taycan 4S: Porsche Active Suspension Management (PASM)
Taycan GTS: Porsche Active Suspension Management (PASM)
Taycan Turbo: Porsche Active Suspension Management (PASM)
Taycan Turbo S: Porsche Active Suspension Management (PASM)

Brakes:
Taycan 4S: Porsche Ceramic Composite Brake (PCCB)
Taycan GTS: Porsche Ceramic Composite Brake (PCCB)
Taycan Turbo: Porsche Ceramic Composite Brake (PCCB)
Taycan Turbo S: Porsche Ceramic Composite Brake (PCCB)

Tires:
Taycan 4S: 19" Taycan Aerodynamic
Taycan GTS: 19" Taycan Sport Design
Taycan Turbo: 19" Taycan Turbo Design
Taycan Turbo S: 19" Taycan Turbo Design

Wheels:
Taycan 4S: 19" Taycan Aerodynamic
Taycan GTS: 19" Taycan Sport Design
Taycan Turbo: 19" Taycan Turbo Design
Taycan Turbo S: 19" Taycan Turbo Design

Exterior Colors:
Taycan 4S: Gentian Blue Metallic, Mahogany Metallic, Frozen Blue Metallic
Taycan GTS: Gentian Blue Metallic, Mahogany Metallic, Frozen Blue Metallic
Taycan Turbo: Gentian Blue Metallic, Mahogany Metallic, Frozen Blue Metallic
Taycan Turbo S: Gentian Blue Metallic, Mahogany Metallic, Frozen Blue Metallic

Interior Colors:
Taycan 4S: Black Leather, Black/Graphite Blue Leather, Black/Cognac Leather, Black/Slate Grey Leather, Black/Mahogany Leather, Black/Frozen Blue Leather, Black/Slate Grey Alcantara, Black/Mahogany Alcantara, Black/Frozen Blue Alcantara
Taycan GTS: Black Leather, Black/Graphite Blue Leather, Black/Cognac Leather, Black/Slate Grey Leather, Black/Mahogany Leather, Black/Frozen Blue Leather, Black/Slate Grey Alcantara, Black/Mahogany Alcantara, Black/Frozen Blue Alcantara
Taycan Turbo: Black Leather, Black/Graphite Blue Leather, Black/Cognac Leather, Black/Slate Grey Leather, Black/Mahogany Leather, Black/Frozen Blue Leather, Black/Slate Grey Alcantara, Black/Mahogany Alcantara, Black/Frozen Blue Alcantara
Taycan Turbo S: Black Leather, Black/Graphite Blue Leather, Black/Cognac Leather, Black/Slate Grey Leather, Black/Mahogany Leather, Black/Frozen Blue Leather, Black/Slate Grey Alcantara, Black/Mahogany Alcantara, Black/Frozen Blue Alcantara

Seat Upholstery:
Taycan 4S: Black Leather, Black/Graphite Blue Leather, Black/Cognac Leather, Black/Slate Grey Leather, Black/Mahogany Leather, Black/Frozen Blue Leather, Black/Slate Grey Alcantara, Black/Mahogany Alcantara, Black/Frozen Blue Alcantara
Taycan GTS: Black Leather, Black/Graphite Blue Leather, Black/Cognac Leather, Black/Slate Grey Leather, Black/Mahogany Leather, Black/Frozen Blue Leather, Black/Slate Grey Alcantara, Black/Mahogany Alcantara, Black/Frozen Blue Leather, Black/Slate Grey Alcantara, Black/Mahogany Alcantara, Black/Frozen Blue Alcantara
Taycan Turbo: Black Leather, Black/Graphite Blue Leather, Black/Cognac Leather, Black/Slate Grey Leather, Black/Mahogany Leather, Black/Frozen Blue Leather, Black/Slate Grey Alcantara, Black/Mahogany Alcantara, Black/Frozen Blue Leather, Black/Slate Grey Alcantara, Black/Mahogany Alcantara, Black/Frozen Blue Alcantara
Taycan Turbo S: Black Leather, Black/Graphite Blue Leather, Black/Cognac Leather, Black/Slate Grey Leather, Black/Mahogany Leather, Black/Frozen Blue Leather, Black/Slate Grey Alcantara, Black/Mahogany Alcantara, Black/Frozen Blue Leather, Black/Slate Grey Alcantara, Black/Mahogany Alcantara, Black/Frozen Blue Alcantara

Seat Upholstery:
Taycan 4S: Black Leather, Black/Graphite Blue Leather, Black/Cognac Leather, Black/Slate Grey Leather, Black/Mahogany Leather, Black/Frozen Blue Leather, Black/Slate Grey Alcantara, Black/Mahogany Alcantara

Models

EQS580V4 (297.144)

- MSRP: $144,200
- Transmission: Automatic Transmission
- Acceleration 0 - 100 (sec): 4.3 Seconds
- Engine Configuration: Dual-Electric Motor (Front and Back)
- HP: 516 hp
- Torque (lb-ft): 630 lb-ft
- Launch Date: Fall 2021

Standard Equipment

EQS580V4

MBC Standard Equipment

- Dual Permanently Synchronous Electric Motors with 516 Hp Total Output
- 810 Burmester Surround Sound System
- 72B USB Type-C Ports
- 107.8 kWh High Voltage Battery
- 4.5 Degree Rear Axle Steering
- 436 Luxury Front Headrests
- 264 License Plate Holder
- 282 Through Loading Rear Seat
- 293 Side Air Bags - Rear
- Driving Assistance Package Plus
- 321 Fingerprint Scanner
- 852 Sensors for Anti-Theft System
- P82 Guard 360 Vehicle Protection Plus
- 500 Exterior Power Folding Mirrors
- P49 Mirror Package
- 40U Beginner Driving Mode
- P15 Electric Art Exterior
- 431 Silver Steering Wheel Shift Paddles
- U12 Velour Floor Mats
- 215 Adaptive Damping System PLUS (ADS PLUS)
- 51U Black Fabric Roof Liner
- 367 Live Traffic Information
- 365 MB Navigation
- PBG MBUX Navigation Premium
- PAF Acoustic Comfort Package
- 444 Head-up Display
- 262 Sensors in Rear for Rear (Keeping in Lane)
- 266 Active Steering Assist
- 513 Traffic Sign Assist
- P20 Driving Assistance Package Plus
- 628 Adaptive Highbeam Assist Plus
- 43U Preinstallation for Symbol Projection
- 501 360 Camera
- P47 Parking Package with 360 Camera
- 871 Foot Activated Trunk/Tailgate Release
- P17 KEYLESS GO Package
- 5B1 Compartment Storage Under Center Console incl. 1*USB
- R02 All-Season Tires
- R06 Noise Reduction Tire Foam
- B53 Acoustic Ambient Protection
- B35 Charging Cable 5m
- 81B AC Charging
- 34U Extended Connectivity Plus
- 22U MBUX Entertainment
- 16U Apple CarPlay
- 13U Preinstallation for EQ Remote and Navigation Services
- 890 EASY-PACK Power Tailgate
- 875 Heated Windshield Washer System
- 783 Radio remote control with panic switch
- 668 Sea Packing
- 536 SiriusXM Satellite Radio
- 475 Tire Pressure Monitoring System
- 443 Heated Steering Wheel
- 351 eCall System
- 294 Driver's Knee Air Bag
- 287 Split Folding Rear Seats
- 241 Power Adjustable Driver’s Seat
- PAG MBUX Hyperscreen with 12.3" Driver Display, 17.7" Central Media Display, 12.3" Passenger Display
- B35 Home Charging Cable
- 894 Ambient Lighting
- AIRMATIC Air Suspension with Adaptive Damping System
- 218 Rear View Camera
- 232 Integrated Garage Door Opener
- 476 Memory Package w/Power Steering Column
- 292 PRE-SAFE Impulse Side
- R61 20" Wheels
- 891 Active Speed Limit Assist
- 534 Connect 20 Premium
- 551 Anti-Theft Alarm System
- 587 Logo Projector Lamp (side mirrors)
- 249 Auto Dimming Mirrors (Rearview & Driver's Side)
- 41U Valet Mode
- P16 Valet Services Mode
- L2B Multifunction Steering Wheel in Nappa Leather
- 7U2 Comfort Seats
- P14 Electric Art Interior
- 489 AIRMATIC
- 502 3 Year Navigation Map Updates
- 01U Navigation Services
- 355 MBUX Extended Functions
- 596 Tinted Infrared Reflecting Glass
- 413 Panoramic Sunroof
- 243 Active Lane Keeping Assist
- 272 Evasive Manouver Support
- 233 Active Distance Assist DISTRONIC
- 546 Active Speed Limit Assist
- 324 Front Reflector Strip
- 318 DIGITAL LIGHT
- PAX Digital Light
- 235 Active Park Assist
- U19 Augmented Reality for Navigation
- 889 KEYLESS-GO
- U25 Illuminated Door Sill Panels
- 2U8 Refrigerant 1234yf
- U10 Weight Sensing System (WSS)
- B59 DYNAMIC SELECT
- B51 Tirefit
- 83B DC Charging
- 35U Connectivity and Extended Charging Plus
- 32U Personalized sound system
- 17U Google Android Auto
- 14U Smartphone Integration
- 897 Wireless Phone Charging - Front
- 876 Interior Lighting Package
- 873 Heated Front Seats
- 723 Luggage Compartment Cover
- 543 Illuminated Visor Vanity Mirrors
- 517 High Definition (HD) Radio
- 460 Canada-Specific Equipment
- 384 Communication Module
- 309 Cup Holder
- 290 Side Window Airbags
- 242 Power Adjustable Passenger’s Seat

Paint

Non-Metallic Paints

149 - Polar White

040 - Black

Metallic Paints

197 - Obsidian Black Metallic

346 - Onyx Black Metallic

595 - Nautical Blue Metallic

842 - Sodalith Blue Metallic

831 - Graphite Grey Metallic

922 - High Tech Silver Metallic

MANUFAKTUR Paints

297 - MANUFAKTUR Selenite Grey magno

996 - MANUFAKTUR Hyacinth Red Metallic

Not available with 18R Wheel or 509A Upholstery

799 - MANUFAKTUR Diamond White Metallic

Code	*Description*	*Availability*	*Price*
149	Polar White		$0
040	Black		$0
197	Obsidian Black Metallic		$0
346	Onyx Black Metallic	All Models	$0
595	Nautical Blue Metallic	All Models	$0
842	Sodalith Blue Metallic	All Models	$0
831	Graphite Grey Metallic	All Models	$0
922	High Tech Silver Metallic	All Models	$0
297	MANUFAKTUR Selenite Grey magno		$2,500
996	MANUFAKTUR Hyacinth Red Metallic Not available with 18R Wheel or 509A Upholstery		$1,600
799	MANUFAKTUR Diamond White Metallic		$1,600

Wheels

R61 - 20" Five-Spoke Aero Wheels with Black Accents

Only with Range-Optimized Summer Tires (R01)
20"
Includes R06 - Noise insulating foam for tires
255/45 R 20 on 8.5J x 20 ET 33

29R - 20" Five-Spoke Aero Wheels with Mercedes-Benz Star Pattern

Only with Range-Optimized Summer Tires (R01). Not with DS1 or DN1
20"
Includes R06 - Noise insulating foam for tires
255/45 R 20 on 8.5J x 20 ET33

18R - 21" 10-Spoke Wheels with Energy Blue Metallic Accents

Highly recommended with Range-Optimized Summer Tires (R01) for best range. With All-Season Tires (R02), range is decreased. Not with DS1 or DN1
21"
R01: MO, R02: MOE Run-Flat
Includes R06 - Noise insulating foam for tires
265/40 R 21 on 9.5J x 21 ET 41.5

RWX - 21" AMG Multispoke with Black Accents

Highly recommended with Range-Optimized Summer Tires (R01) for best range. With All-Season Tires (R02), range is decreased.
21"
R01: MO, R02: MOE Run-Flat
Only with DS1 or DN1
Includes R06 - Noise insulating foam for tires
265 / 40 R 21 on 9.5J x 21 ET 41.5

RWY - 21" AMG Multispoke with Black Accents

Highly recommended with Range-Optimized Summer Tires (R01) for best range. With All-Season Tires (R02), range is decreased.
21"
R01: MO, R02: MOE Run-Flat
Only with DS1 or DN1
Includes R06 - Noise insulating foam for tires
265/40 R 21 on 9.5 J x 21 ET 41.5

00R - 22" 5-Twin Spoke Wheels with Black Accents

Only with Range-Optimized Summer Tires (R01), Not with DS1 or DN1
22"
Includes R06 - Noise insulating foam for tires
265/35 R 22 on 9.5J x 22 ET 41.5

Code	*Wheel Size*	*Description*	*Wheel Dimensions*	*Mobility*	*Availability*	*MSRP*
R61	20"	Includes R06 - Noise insulating foam for tires Only with Range-Optimized Summer Tires (R01)	255/45 R 20 on 8.5J x 20 ET 33		All Models	$0
29R	20"	Includes R06 - Noise insulating foam for tires Only with Range-Optimized Summer Tires (R01). Not with DS1 or DN1	255/45 R 20 on 8.5J x 20 ET33		All Models	$500
18R	21"	Includes R06 - Noise insulating foam for tires Highly recommended with Range-Optimized Summer Tires (R01) for best range. With All-Season Tires (R02), range is decreased. Not with DS1 or DN1	265/40 R 21 on 9.5J x 21 ET 41.5	R01: MO, R02: MOE Run-Flat	All Models	$1,500
RWX	21"	Only with DS1 or DN1 Includes R06 - Noise insulating foam for tires Highly recommended with Range-Optimized Summer Tires (R01) for best range. With All-Season Tires (R02), range is decreased.	265 / 40 R 21 on 9.5J x 21 ET 41.5	R01: MO, R02: MOE Run-Flat	All Models	$0
RWY	21"	Only with DS1 or DN1 Includes R06 - Noise insulating foam for tires Highly recommended with Range-Optimized Summer Tires (R01) for best range. With All-Season Tires (R02), range is decreased.	265/40 R 21 on 9.5 J x 21 ET 41.5	R01: MO, R02: MOE Run-Flat	All Models	$0
00R	22"	Includes R06 - Noise insulating foam for tires Only with Range-Optimized Summer Tires (R01), Not with DS1 or DN1	265/35 R 22 on 9.5J x 22 ET 41.5		All Models	$2,000

Upholstery

MANUFAKTUR Nappa Leather

509 - MANUFAKTUR Neva Grey / Biscaya Blue Nappa Leather

Only available with Premium Package (DP1) + Exclusive Nappa Leather Package (P87)
Not available with Sport Interior (DS2) and/or MANUFAKTUR Hyacinth Red Metallic Paint (996)

519 - Edition One MANUFAKTUR Neva Grey / Reflex Blue Nappa Leather

Only available on the Edition 1

Nappa Leather

801 - Black / Space Grey Nappa Leather

Requires Premium Package (DP1)
Not available with Sport Interior (DS2)

805 - Macchiato Beige / Space Grey Nappa Leather

Requires Premium Package (DP1)
Not available with Sport Interior (DS2)

811 - Black / Balao Brown Nappa Leather

Requires Premium Package (DP1)
Not available with Sport Interior (DS2)

Leather

201 - Black / Space Grey Leather

205 - Macchiato Beige / Space Grey Leather

209 - Neva Grey / Balao Brown Leather

211 - Black / Balao Brown Leather

229 - Neva Grey / Balao Brown

Requires Sport Interior (DS2)
Seats feature Digital Rain perforation pattern

231 - Black / Space Grey Leather with Red Stitching Accents

Requires Sport Interior (DS2)
Upper dashboard and armrests feature red stitching elements.
Seats feature Digital Rain perforation pattern

Code	Description	Availability	Price
509	MANUFAKTUR Neva Grey / Biscaya Blue Nappa Leather	All Models	$0
519	Edition One MANUFAKTUR Neva Grey / Reflex Blue Nappa Leather	All Models	$0
801	Black / Space Grey Nappa Leather	All Models	$0
805	Macchiato Beige / Space Grey Nappa Leather	All Models	$0
811	Black / Balao Brown Nappa Leather	All Models	$0
201	Black / Space Grey Leather		$0
205	Macchiato Beige / Space Grey Leather	All Models	$0
209	Neva Grey / Balao Brown Leather	All Models	$0
211	Black / Balao Brown Leather	All Models	$0
229	Neva Grey / Balao Brown	All Models	$0
231	Black / Space Grey Leather with Red Stitching Accents	All Models	$0

Code	Upholstery	Seats	Floor Mats	Upper Dash/Lower Dash	Seat Belts	Steering Wheel	Headliner
509	MANUFAKTUR Neva Grey / Biscaya Blue Nappa Leather	Neva Grey	Neva Grey	Biscaya Blue Nappa-Optic Upper with Rose Gold Stitching / Neva Grey MB-Tex Lower	Neva Grey	Neva Grey	69U Grey Microfiber Headliner
519	Edition One MANUFAKTUR Neva Grey / Reflex Blue Nappa Leather	Neva Grey	Neva Grey	Stratos Blue Nappa-Optic Upper with Rose Gold Stitching / Neva Grey MB-Tex Lower	Neva Grey	Neva Grey	69U Grey Microfiber Headliner
801	Black / Space Grey Nappa Leather	Black	Black	Space Grey Neotex Upper with Rose Gold Stitching / Black MB-Tex Lower	Black	Black	51U Black Fabric Headliner
805	Macchiato Beige / Space Grey Nappa Leather	Macchiato Beige	Space Grey	Space Grey Neotex Upper with Rose Gold Stitching / Macchiato Beige MB-Tex Lower	Macchiato Beige	Macchiato Beige	55U Macchiato Beige Cloth Headliner
811	Black / Balao Brown Nappa Leather	Black	Black	Sable Brown Neotex Upper with Rose Gold Stitching / Black MB-Tex Lower	Black	Black	51U Black Fabric Headliner
201	Black / Space Grey Leather	Black	Black	Space Grey Neotex Upper / Black MB-Tex Lower	Black	Black	51U Black or 61U Black Microfiber
205	Macchiato Beige / Space Grey Leather	Macchiato Beige	Space Grey	Space Grey Neotex Upper / Macchiato Beige MB-Tex	Macchiato Beige	Macchiato Beige	55U Macchiato Beige
209	Neva Grey / Balao Brown Leather	Neva Grey	Balao Brown	Balao Brown Neotex Upper / Neva Grey MB-Tex Lower	Neva Grey	Neva Grey	59U - Grey or 69U Grey Microfiber
211	Black / Balao Brown Leather	Black	Black	Balao Brown Neotex Upper / Black MB-Tex Lower	Black	Black	51U Black or 61U Black Microfiber
229	Neva Grey / Balao Brown	Neva Grey	Balao Brown	Balao Brown Neotex Upper / Neva Grey MB-Tex Lower	Neva Grey	Neva Grey	59U Grey or 69U Grey Microfiber
231	Black / Space Grey Leather with Red Stitching Accents	Black	Black	Space Grey Neotex Upper / Black MB-Tex Lower with Microfiber Accents	Black	Black	51U Black or 61U Black Microfiber

Trims

H08 - Natural Grain Anthracite Linden Wood Dashboard and Door Trim

In combination with MBUX Hyperscreen, includes code 775 for matching center console

H12 - Brown Open-Pore Walnut Wood Dashboard and Door Trim

In combination with MBUX Hyperscreen, includes code 798 for matching center console

H39 - Ship's deck open-pore walnut trim

In combination with MBUX Hyperscreen, includes code 697 for matching center console

Code	*Description*	*Availability*	*Price*
H08	Natural Grain Anthracite Linden Wood Dashboard and Door Trim In combination with MBUX Hyperscreen, includes code 775 for matching center console	All Models	$0
H12	Brown Open-Pore Walnut Wood Dashboard and Door Trim In combination with MBUX Hyperscreen, includes code 798 for matching center console	All Models	$0
H39	Ship's deck open-pore walnut trim In combination with MBUX Hyperscreen, includes code 697 for matching center console	All Models	$0

Packages

Code	Packages	Availability	MSRP
DP1	Premium Package Includes all Standard Equipment. Highlights include: ■ 444 - Head-Up Display ■ PDD - Global Equipment Level Code ■ 399 - Multicontour Front Seats with Massage ■ 401 - Climate Comfort Front Seats ■ P21 - Air Balance Package ■ 216 - 10˚ Rear Axle Steering ■ 902 - Seat Heating Plus ■ 581 - THERMOTRONIC Automatic Climate Control	All Models	$7,000
DS1	Sport Package Not with DN1 (Night Package) ■ RWX - 21" AMG Multi-Spoke Wheels with Black Accents ■ P31 - AMG Line exterior ■ 772 - AMG Styling Package ■ 5U4 - Star Panel Grille	All Models	$4,500
DN1	Night Package Not with DS1 (Sport Package) ■ U50 - Omission of Heat Insulating dark-tinted Glass ■ P55 - Night Package ■ 772 - AMG Styling Package ■ RWX - 21" AMG Multi-Spoke Wheels with Black Accents ■ P31 - AMG Line exterior	All Models	$5,000
DS2	Sport Interior Package Only with (DS1 or DN1) and (229A or 231A upholstery), not available with Nappa Leather ■ U26 - AMG Velour Floor Mats ■ P29 - AMG Line interior ■ L5C - Multifunction Sport Steering Wheel ■ 7U4 - AMG Line Sport Comfort Seat with Integrated Headrests and Ambient Lighting	All Models	$3,000
D01	Premium Rear Seating Package ■ 293 - Side Air Bags - Rear ■ 223 - Electrically Adjustable Rear Seats ■ 402 - Climate Comfort Rear Seats ■ PAS - Rear Seat Package ■ 437 - Luxury Rear Head Restraints ■ 326 - Comfort Rear Armrests ■ 898 - Wireless Phone Charging - Rear	All Models	$3,000
D02	Executive Rear Seating Package Not with: DO1 ■ 223 - Electrically Adjustable Rear Seats ■ 406 - Multicontour Rear Seats ■ 437 - Luxury Rear Head Restraints ■ P43 - Rear Multicontour Seats ■ 903 - Enhanced Heated Rear Seats ■ 898 - Wireless Phone Charging System in Rear ■ 322 - Neck Warmer ■ 293 - Side Air Bags - Rear ■ 326 - Comfort Rear Armrests ■ 447 - MBUX Rear Tablet ■ 402 - Climate Comfort Rear Seats	All Models	$7,000

Options

Factory Options

Code	Options	Availability	MSRP
21U	Dashcam		$300
P53	ENERGIZING AIR CONTROL Plus (Includes 914: Hepa Filter)		$650
P87	Exclusive Nappa Leather Package Only with DP1, Includes: 509A, 561, H39, 59U. Please note: Without DP1 selected, P87 will automatically add 445, you are able to revert back to 444		$2,000
306	Rear Seatbelt Bags Not possible with: 205A, 209A, 229A, 509A, 519A, 805A, 859A		$590
77B	MBUX Interior Assistant Not possible with 509A, 519A, 209A, 859A		$650
445	MBUX Augmented Reality Head-Up Display Replaces 444 (Head-up Display), Only with Hyoerscreen (PAG)		$3,100
597	Windshield Heater		$650
878	Active Ambient Lighting Required for certain production months due to semi-conductor shortage		$700

Specifications

EQS580V4

Chassis	
Drivetrain	
Transmission	Automatic Transmission
Drive Configuration	All-wheel Drive
Engine	
Engine Configuration	Dual-Electric Motor (Front and Back)
HP	516 hp
Torque (lb-ft)	630 lb-ft
AC and DC Charging	AC: up to 9.6 kW DC: up to 200 kW
EPA Range	TBA
Performance	
Acceleration 0 - 100 (sec)	4.3 Seconds
Top Speed (km/h)	210 km/h (Electronically Limited)
Exterior Dimensions	
Vehicle Length (mm)	5,265
Vehicle Height (mm)	1,513
Vehicle Width w/ exterior mirrors (mm)	1,926
Wheelbase (mm)	3,210
Curb Weight (lbs)	5,698
Track Width Front/Rear (mm)	1,667/1,682
Wheels and Tires	
Interior Dimensions	
Trunk Size (cubic feet)	610 Liters 1,770 Liters (Seats Folded Down)

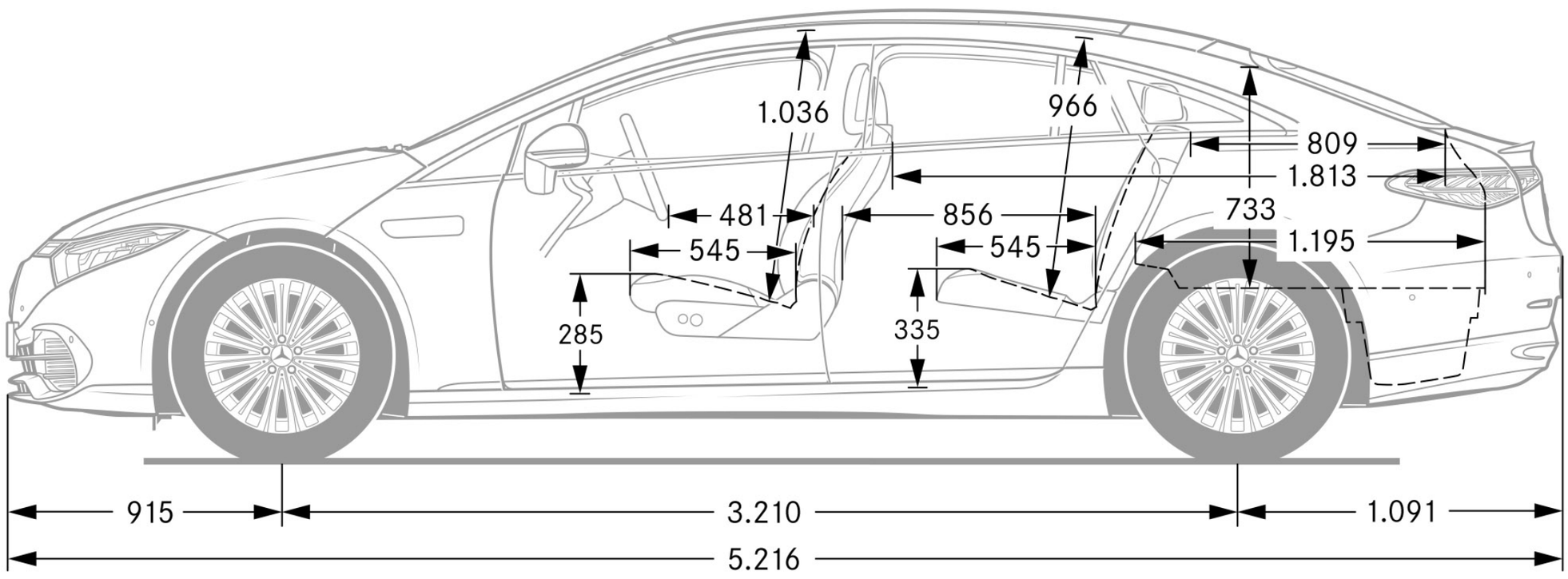

Gallery