2021 G-Class SUV Order Guide

Table of Contents

1	General Information
2	What's New
3	Models
4	Equipment
4.1	Standard Equipment
4.2	Exterior Paint Colors
4.3	Wheels
4.4	Interior Upholstery
4.5	Interior Trims
4.6	Packages
4.7	Options
4.8	Specifications
5	Options In Detail
6	Build Recommendations
7	Gallery

General Information

Important Note

The information presented in this guide is based on the most current information available and is intended for internal use only. Mercedes-Benz reserves the right to make changes at any time, without notice, to colors, materials, equipment, special specifications and models.

Pricing may not yet be finalized for some models or options.
Due to variances among monitors and printers the colors that appear on your screen and printouts may not be exact.
For illustrative purposes, some images may show vehicles with European Specification.

Revision History

Date	Description
05/21/2020	Initial MY21 release

What's New

G550W4

Paints

- G manufaktur Arabian Grey non-metallic
- G manufaktur China Blue non-metallic
- G manufaktur Deep Green non-metallic

Standard Equipment

- Wireless Charging

Options

- Spare Wheel Cover Ring in Night Black magno

Packages

- Night Package magno

Wheels

- 20" AMG Twin 5-Spoke Wheels w/ Black Accents
- 20" AMG Twin 5-Spoke Wheels

Models

G550W4 (463.261)

- MSRP: TBD
- Transmission: 9G-TRONIC Automatic Transmission
- Transmission Speeds: 9
- Acceleration 0-60 mph (sec): 5.6
- Engine Configuration : 4.0L V8 biturbo engine
- Power (hp): 416
- Torque (lb-ft): 450
- Launch Date: Late 2020

Standard Equipment

G550W4

Performance & Handling

- 9G-TRONIC 9-speed automatic transmission
- DYNAMIC SELECT driving programs
- 19” 8-spoke wheels
- Three 100% differential locks
- Electric steering rack
- 4.0L V8 biturbo engine (416 hp, 450 lb-ft)
- 4MATIC all-wheel drive (40/60 distribution)
- Low-range gear reduction
- Independent front axle suspension

Comfort & Convenience

- 3-zone climate control w/ air ionization
- 64-color ambient lighting
- 115V socket
- 12-way power front seats w/ memory function
- EASY-PACK load compartment cover
- Double cup holder in the front center console
- COMAND Online navigation system incl. 12.3” media display
- Apple CarPlay & Android Auto
- SiriusXM® Radio with 6-month all-access trial
- Rearview camera
- KEYLESS-START
- Heated windshield and washer system w/ rain-sensing windshield wipers
- Auto-dimming rear-view mirror and exterior mirror on driver’s side
- Brush guard
- EH6 Wireless Charging
- Power tilt/sliding sunroof
- Garage door opener
- Velours floor mats
- Heated front and rear seats
- Split folding rear seats (40/60)
- Foldable rear center armrest w/ two cup holders
- Multifunction steering wheel w/ touch control buttons
- Burmester® Surround Sound System
- Mercedes me connect services w/ 3-year trial
- Active Parking Assist w/ PARKTRONIC
- Privacy glass for rear windows
- Heated and power-folding exterior mirrors
- Tow hitch
- Stainless steel running boards

Safety & Security

- Active Brake Assist
- LED Intelligent Light System
- Active Distance Assist DISTRONIC
- ATTENTION ASSIST
- Blind Spot Assist
- Mercedes-Benz Emergency Call
- Traffic Sign Assist
- Active Lane Keeping Assist
- Adaptive Highbeam Assist
- Anti-Theft Alarm System
- 10 Airbags (2x front, 2x knee, 2x window, 4x side)
- Heat- and noise-insulating glass
- PRE-SAFE®

Paint

Non-Metallic Paints

040 - Black

149 - Polar White

Metallic Paints

183 - Magnetite Black

197 - Obsidian Black

300 - Jade Green

660 - Rubellite Red

775 - Iridium Silver

796 - Dakota Brown

859 - Mojave Silver

890 - Lunar Blue

896 - Brilliant Blue

989 - Emerald Green

963 - Indium Grey

992 - Selenite Grey

designo Paints

032 - designo Mystic Blue metallic

033 - designo Mocha Black metallic

041 - designo Graphite metallic

046 - designo Platinum Black metallic

052 - designo Mystic Brown metallic

799 - designo Diamond White metallic

996 - designo Cardinal Red metallic

designo Magno Paints

056 - designo Night Black magno
Limited availability

051 - designo Platinum magno
Limited availability

G manufaktur

026 - G manufaktur Sea Blue metallic

NEW

124 - G manufaktur Arabian Grey non-metallic

162 - G manufaktur South Sea Blue metallic

255 - G manufaktur Olive metallic

464 - G manufaktur Desert Sand non-metallic

589 - G manufaktur Jupiter Red non-metallic

693 - G manufaktur Desert Silver metallic

NEW

825 - G manufaktur Deep Green non-metallic

904 - G manufaktur Midnight Blue non-metallic

NEW

934 - G manufaktur China Blue non-metallic

G manufaktur Magno Paints

054 - G manufaktur Monza Grey magno
Limited availability

164 - G manufaktur Dark Olive Green magno
Limited availability

271 - G manufaktur Dakota Brown magno
Limited availability

795 - G manufaktur Sintered Bronze magno
Limited availability

Code	*Description*	*Availability*	*Price*
040	Black	All Models	$0
149	Polar White	All Models	$0
183	Magnetite Black	All Models	$0
197	Obsidian Black	All Models	$0
300	Jade Green	All Models	$0
660	Rubellite Red	All Models	$0
775	Iridium Silver	All Models	$0
796	Dakota Brown	All Models	$0
859	Mojave Silver	All Models	$0
890	Lunar Blue	All Models	$0
896	Brilliant Blue	All Models	$0
989	Emerald Green	All Models	$0
963	Indium Grey	All Models	$0
992	Selenite Grey	All Models	$0
032	designo Mystic Blue metallic	All Models	$2,300
033	designo Mocha Black metallic	All Models	$2,300
041	designo Graphite metallic	G550W4	$2,300
046	designo Platinum Black metallic	All Models	$2,300
052	designo Mystic Brown metallic	All Models	$2,300
799	designo Diamond White metallic	All Models	$2,300
996	designo Cardinal Red metallic	All Models	$2,300
056	designo Night Black magno Limited availability	All Models	$3,950
051	designo Platinum magno Limited availability	All Models	$3,950
026	G manufaktur Sea Blue metallic	All Models	$6,500
124 (New)	G manufaktur Arabian Grey non-metallic	All Models	$6,500
162	G manufaktur South Sea Blue metallic	All Models	$6,500
255	G manufaktur Olive metallic	All Models	$6,500
464	G manufaktur Desert Sand non-metallic	All Models	$6,500
589	G manufaktur Jupiter Red non-metallic	All Models	$6,500
693	G manufaktur Desert Silver metallic	All Models	$6,500
825 (New)	G manufaktur Deep Green non-metallic	All Models	$6,500
904	G manufaktur Midnight Blue non-metallic	All Models	$6,500
934 (New)	G manufaktur China Blue non-metallic	All Models	$6,500
054	G manufaktur Monza Grey magno Limited availability	All Models	$6,500
164	G manufaktur Dark Olive Green magno Limited availability	All Models	$6,500
271	G manufaktur Dakota Brown magno Limited availability	All Models	$6,500
795	G manufaktur Sintered Bronze magno Limited availability	All Models	$6,500

Wheels

RK7 - 18” 5-Spoke Wheels, Matte Black

Not available w/ AMG Line (DG1) or Night Packages (DC1/DE9/DF4)
18"
All-Terrain
5-Spoke Wheels, Matte Black
265/60 R18 on 8J x 18 ET43 (Front) 265/60 R18 on 8J x 18 ET43 (Rear)

RK3 - 19” 8-Spoke Wheels

Standard, Not w/ AMG Line (DG1) or Night Packages (DC1/DE9/DF4)
19"
R02
8-Spoke Wheels
275/55 R19 on 8.5 J x 19 ET52 (Front) 275/55 R19 on 8.5 J x 19 ET52 (Rear)

RK2 - 19” Twin 5-Spoke Wheels

Not available w/ AMG Line (DG1) or Night Packages (DC1/DE9/DF4)
19"
R02
Twin 5-Spoke Wheels
275/55 R19 on 8.5 J x 19 ET52 (Front) 275/55 R19 on 8.5 J x 19 ET52 (Rear)

RJ4 - 19” Twin 5-Spoke Wheels, Black

Not available w/ AMG Line (DG1) or Night Packages (DC1/DE9/DF4)
19"
R02
Twin 5-Spoke Wheels, Black
275/55 R19 on 8.5 J x 19 ET52 (Front) 275/55 R19 on 8.5 J x 19 ET52 (Rear)

RK4 - 20” AMG Multi-Spoke Wheels

Requires AMG Line (DG1), Not available w/ Night Packages (DC1/DE9/DF4)
20"
R02
AMG Multi-Spoke Wheels
275/50 R20 on 8.5 J x 20 ET32 (Front) 275/50 R20 on 8.5 J x 20 ET32 (Rear)

RG6 - 20” AMG Multi-Spoke Wheels w/ Black Accents

Requires AMG Line (DG1) & Night Package (DC1/DE9/DF4)
20"
R02
AMG Multi-Spoke Wheels w/ Black Accents
275/50 R20 on 8.5 J x 20 ET32 (Front) 275/50 R20 on 8.5 J x 20 ET32 (Rear)

RJ5 - 20” AMG Multi-Spoke Wheels, Black

Requires AMG Line (DG1) & Night Package (DC1/DE9/DF4)
20"
R02
AMG Multi-Spoke Wheels, Black
275/50 R20 on 8.5 J x 20 ET32 (Front) 275/50 R20 on 8.5 J x 20 ET32 (Rear)

NEW

R16 - 20" AMG Twin 5-Spoke Wheels w/ Black Accents

Requires AMG Line (DG1) & Night Package (DC1/DE9/DF4)
20"/20"
R02
AMG Twin 5-Spoke Wheels w/ Black Accents
275/50 R20 on 8.5 J x 20 ET32 (Front) 275/50 R20 on 8.5 J x 20 ET32 (Rear)

NEW

R17 - 20" AMG Twin 5-Spoke Wheels

Requires AMG Line (DG1), Not available w/ Night Packages (DC1/DE9/DF4)
20"/20"
R02
AMG Twin 5-Spoke Wheels
275/50 R20 on 8.5 J x 20 ET32 (Front) 275/50 R20 on 8.5 J x 20 ET32 (Rear)

Code	*Wheel Size*	*Description*	*Wheel Dimensions*	*Mobility*	*Availability*	*MSRP*
RK7	18"	5-Spoke Wheels, Matte Black Not available w/ AMG Line (DG1) or Night Packages (DC1/DE9/DF4)	265/60 R18 on 8J x 18 ET43 (Front) 265/60 R18 on 8J x 18 ET43 (Rear)	All-Terrain	All Models	$1,000
RK3	19"	8-Spoke Wheels Standard, Not w/ AMG Line (DG1) or Night Packages (DC1/DE9/DF4)	275/55 R19 on 8.5 J x 19 ET52 (Front) 275/55 R19 on 8.5 J x 19 ET52 (Rear)	R02	All Models	$0
RK2	19"	Twin 5-Spoke Wheels Not available w/ AMG Line (DG1) or Night Packages (DC1/DE9/DF4)	275/55 R19 on 8.5 J x 19 ET52 (Front) 275/55 R19 on 8.5 J x 19 ET52 (Rear)	R02	All Models	$0
RJ4	19"	Twin 5-Spoke Wheels, Black Not available w/ AMG Line (DG1) or Night Packages (DC1/DE9/DF4)	275/55 R19 on 8.5 J x 19 ET52 (Front) 275/55 R19 on 8.5 J x 19 ET52 (Rear)	R02	All Models	$500
RK4	20"	AMG Multi-Spoke Wheels Requires AMG Line (DG1), Not available w/ Night Packages (DC1/DE9/DF4)	275/50 R20 on 8.5 J x 20 ET32 (Front) 275/50 R20 on 8.5 J x 20 ET32 (Rear)	R02	All Models	$0
RG6	20"	AMG Multi-Spoke Wheels w/ Black Accents Requires AMG Line (DG1) & Night Package (DC1/DE9/DF4)	275/50 R20 on 8.5 J x 20 ET32 (Front) 275/50 R20 on 8.5 J x 20 ET32 (Rear)	R02	All Models	$0
RJ5	20"	AMG Multi-Spoke Wheels, Black Requires AMG Line (DG1) & Night Package (DC1/DE9/DF4)	275/50 R20 on 8.5 J x 20 ET32 (Front) 275/50 R20 on 8.5 J x 20 ET32 (Rear)	R02	All Models	$300
R16 (New)	20"/20"	AMG Twin 5-Spoke Wheels w/ Black Accents Requires AMG Line (DG1) & Night Package (DC1/DE9/DF4)	275/50 R20 on 8.5 J x 20 ET32 (Front) 275/50 R20 on 8.5 J x 20 ET32 (Rear)	R02	All Models	$300
R17 (New)	20"/20"	AMG Twin 5-Spoke Wheels Requires AMG Line (DG1), Not available w/ Night Packages (DC1/DE9/DF4)	275/50 R20 on 8.5 J x 20 ET32 (Front) 275/50 R20 on 8.5 J x 20 ET32 (Rear)	R02	All Models	$0

Upholstery

Leather

201 - Black
Standard

2014 - Black w/ red stitching
Requires AMG Line (051)

214 - Nut Brown/Black

215 - Macchiato Beige/Black leather

Nappa Leather

501 - Black
Requires Exclusive Interior Package (081)

501A - Black Nappa leather w/ red stitching
Requires AMG Line (051)
Requires AMG Line (051)

507 - Classic Red/Black
Requires Exclusive Interior Package (081)

525 - Tartufo Brown/Black
Requires Exclusive Interior Package (081)

535 - Macchiato Beige/Espresso Brown
Requires Exclusive Interior Package (081)
Not available in Sport Steering Wheel (L38)

Exclusive Nappa Leather

801 - Black
Requires Exclusive Interior Package (081)
Not available in Sport Steering Wheel (L38)

807 - Classic Red/Black
Requires Exclusive Interior Package Plus (083)
Not available in Sport Steering Wheel (L38)

815 - Tartufo Brown/Black
Requires Exclusive Interior Package Plus (083)
Not available in Sport Steering Wheel (L38) and Light Brown Zebrano wood trim (V44)

G manufaktur Nappa Leather w/ Contrast Stitching

902 - Black w/ Tartufo Brown Stitching
Requires G manufaktur Interior Package Plus (004)

903 - Black w/ White Stitching
Requires G manufaktur Interior Package Plus (004)

906 - Black w/ Brown Stitching
Requires G manufaktur Interior Package Plus (004)

906 - Black w/ Lime Green Stitching
Requires G manufaktur Interior Package Plus (004)

907 - Black w/ Red Stitching
Requires G manufaktur Interior Package Plus (004)

909 - Black w/ Gold Stitching
Requires G manufaktur Interior Package Plus (004)

G manufaktur Exclusive Nappa Leather w/ Contrast Stitching

902 - Black w/ Tartufo Brown Stitching
Requires G manufaktur Interior Package Plus (005)

903 - Black w/ White Stitching
Requires G manufaktur Interior Package Plus (005)

906 - Black w/ Brown Stitching
Requires G manufaktur Interior Package Plus (005)

906 - Black w/ Lime Green Stitching
Requires G manufaktur Interior Package Plus (005)

907 - Black w/ Red Stitching
Requires G manufaktur Interior Package Plus (005)

909 - Black w/ Gold Stitching
Requires G manufaktur Interior Package Plus (005)

G manufaktur Nappa Leather w/ Contrast A-Band

912 - Black w/ Tacht Blue A-Band
Requires G manufaktur Interior Package Plus (005)

913 - Platinum White w/ Black A-Band
Requires G manufaktur Interior Package Plus (005)

914 - Saddle Brown w/ Black A-Band
Requires G manufaktur Interior Package Plus (005)

914 - Black w/ Lime Green A-Band
Requires G manufaktur Interior Package Plus (005)

917 - Black w/ Bengal Red A-Band
Requires G manufaktur Interior Package Plus (005)

G manufaktur Single Tone Nappa Leather

512 - Tacht Blue
Requires G manufaktur Interior Package (004)
Available w/ Two Tone Steering Wheel (J3)

513 - Platinum White
Requires G manufaktur Interior Package (004)
Available w/ Two Tone Steering Wheel (J3)

514 - Espresso Brown
Requires G manufaktur Interior Package (004)
Available w/ Two Tone Steering Wheel (J3,3)

517 - Bengal Red
Requires G manufaktur Interior Package (004)
Available w/ Two Tone Steering Wheel (J3,3)

518 - Titanium Grey Pearl
Requires G manufaktur Interior Package (004)
Available w/ Two Tone Steering Wheel (J3,3)

534 - Saddle Brown
Requires G manufaktur Interior Package (004)
Available w/ Two Tone Steering Wheel (J3,3)

G manufaktur Exclusive Single Tone Nappa Leather

512 - Tacht Blue
Requires G manufaktur Interior Package Plus (005)
Available w/ Two Tone Dashboard (Z3) and Steering Wheel (J3,3)

513 - Platinum White
Requires G manufaktur Interior Package Plus (005)
Available w/ Two Tone Dashboard (Z3) and Steering Wheel (J3,3)

514 - Espresso Brown
Requires G manufaktur Interior Package Plus (005)
Available w/ Two Tone Dashboard (Z3) and Steering Wheel (J3,3)

517 - Bengal Red
Requires G manufaktur Interior Package Plus (005)
Available w/ Two Tone Dashboard (Z3) and Steering Wheel (J3,3)

518 - Titanium Grey Pearl
Requires G manufaktur Interior Package Plus (005)
Available w/ Two Tone Dashboard (Z3) and Steering Wheel (J3,3)

534 - Saddle Brown
Requires G manufaktur Interior Package Plus (005)
Available w/ Two Tone Dashboard (Z3) and Steering Wheel (J3,3)

G manufaktur Two Tone Nappa Leather

512 - Tacht Blue/Black
Requires G manufaktur Interior Package (004)
Available w/ Two Tone Steering Wheel (J3,3)

513 - Platinum White/Black
Requires G manufaktur Interior Package (004)
Available w/ Two Tone Steering Wheel (J3,3)

514 - Espresso Brown/Black
Requires G manufaktur Interior Package (004)
Available w/ Two Tone Steering Wheel (J3,3)

517 - Bengal Red/Black
Requires G manufaktur Interior Package (004)
Available w/ Two Tone Steering Wheel (J3,3)

518 - Titanium Grey Pearl/Black
Requires G manufaktur Interior Package (004)
Available w/ Two Tone Steering Wheel (J3,3)

534 - Saddle Brown/Black
Requires G manufaktur Interior Package (004)
Available w/ Two Tone Steering Wheel (J3,3)

G manufaktur Exclusive Two Tone Nappa Leather

512 - Tacht Blue/Black
Requires G manufaktur Interior Package Plus (005)
Available w/ Two Tone Dashboard (Z3) and Steering Wheel (J3,3)

513 - Platinum White/Black
Requires G manufaktur Interior Package Plus (005)
Available w/ Two Tone Dashboard (Z3) and Steering Wheel (J3,3)

514A - Espresso Brown/Black
Requires G manufaktur Interior Package Plus (005)
Available w/ Two Tone Dashboard (Z3) and Steering Wheel (J3,3)

517 - Bengal Red/Black
Requires G manufaktur Interior Package Plus (005)
Available w/ Two Tone Dashboard (Z3) and Steering Wheel (J3,3)

518 - Titanium Grey Pearl/Black
Requires G manufaktur Interior Package Plus (005)
Available w/ Two Tone Dashboard (Z3) and Steering Wheel (J3,3)

534 - Saddle Brown/Black
Requires G manufaktur Interior Package Plus (005)
Available w/ Two Tone Dashboard (Z3) and Steering Wheel (J3,3)

Code	Description	Availability	Price
201	Black	All Models	$0
2014	Black w/ red stitching	All Models	$0
214	Nut Brown/Black	All Models	$0
215	Macchiato Beige/Black leather	All Models	$0
501	Black	All Models	$0
501A	Black Nappa leather w/ red stitching	All Models	$0
507	Classic Red/Black	All Models	$0
525	Tartufo Brown/Black	All Models	$0
535	Macchiato Beige/Black Nappa leather	All Models	$0
801	Black	All Models	$0
807	Classic Red/Black	All Models	$0
815	Tartufo Brown/Black	All Models	$0
835	Macchiato Beige/Espresso Brown	All Models	$0
902	Black w/ Tartufo Brown Stitching	G550M	$0
903	Black w/ White Stitching	G550M	$0
906	Black w/ Brown Stitching	G550M	$0
906	Black w/ Lime Green Stitching	G550M	$0
907	Black w/ Red Stitching	G550M	$0
909	Black w/ Gold Stitching	G550M	$0
912	Black w/ Tacht Blue A-Band	G550M	$0
913	Platinum White w/ Black A-Band	G550M	$0
914	Saddle Brown w/ Black A-Band	All Models	$0
914	Black w/ Lime Green A-Band	All Models	$0
917	Black w/ Bengal Red A-Band	G550M	$0
922	Tacht Blue	G550M	$0
923	Platinum White	G550M	$0
924	Espresso Brown	G550M	$0
927	Bengal Red	G550M	$0
928	Titanium Grey Pearl	G550M	$0
934	Saddle Brown	G550M	$0
952	Tacht Blue/Black	G550M	$400
953	Platinum White/Black	G550M	$400
954	Espresso Brown/Black	All Models	$400
957	Bengal Red/Black	G550M	$400
958	Titanium Grey Pearl/Black	G550M	$400
964	Saddle Brown/Black	G550M	$400

Code	Upholstery	Seats	Floor Mats	Upper Dash/Lower Dash	Seat Belts	Steering Wheel	Headliner
201	Black	Black	Black	Black/Black	Black	Black	Black
2014	Black w/ red stitching	Black	Black	Black/Black	Red	Black	Black
214	Nut Brown/Black	Nut Brown	Black	Black/Black/Nut Brown	Black	Black	Black
215	Macchiato Beige/Black leather	Macchiato Beige	Black	Black/Black/Macchiato Beige	Black	Black	Black
501	Black	Black	Black	Black/Black	Black	Black	Black
501A	Black Nappa leather w/ red stitching	Black	Black	Black/Black/Red	Red	Black	Black
507	Classic Red/Black	Classic Red	Black	Black/Black/Classic Red	Black	Black	Black
525	Tartufo Brown/Black	Tartufo Brown	Black	Black/Black/Brown/Tartufo Brown	Black	Black	Black
535	Macchiato Beige/Black Nappa leather	Macchiato Beige	Black	Black/Black/Macchiato Beige	Black	Black	Black
801	Black	Black	Black	Black/Black	Black	Black	Black
835	Macchiato Beige/Espresso Brown	Macchiato Beige	Black	Espresso Brown/Macchiato Beige/Macchiato Beige	Macchiato Beige	Espresso Brown	Beige
807	Classic Red/Black	Classic Red	Black	Black/Classic Red/Classic Red	Black	Black	Black
815	Tartufo Brown/Black	Tartufo Brown	Black	Black/Black/Brown/Tartufo Brown	Black	Black	Black
902	Black w/ Tacht Blue Stitching	Black	Black	Black/Black	Black	Black	Black
903	Black w/ White Stitching	Black	Black	Black/Black	Black	Black	Black
906	Black w/ Brown Stitching	Black	Black	Black/Black	Black	Black	Black
906	Black w/ Lime Green Stitching	Black	Black	Black/Black	Black	Black	Black
907	Black w/ Red Stitching	Black	Black	Black/Black	Black	Black	Black
909	Black w/ Gold Stitching	Black	Black	Black/Black	Black	Black	Black
912	Black w/ Tacht Blue A-Band	Black/Blue	Black	Black/Black	Black	Black	Black
913	Platinum White w/ Black A-Band	White/Black	Black	Black/Black	Black	Black	Black
914	Saddle Brown w/ Black A-Band	Brown/Black	Black	Black/Black	Black	Black	Black
914	Black w/ Lime Green A-Band	Black/Lime Green	Black	Black/Black	Black	Black	Black
917	Black w/ Bengal Red A-Band	Black/Red	Black	Black/Black	Black	Black	Black
922	Tacht Blue	Blue	Black	Black/Black	Black	Black	Black
923	Platinum White	White	Black	Black/Black	Black	Black	Black
924	Espresso Brown	Brown	Black	Black/Black	Black	Black	Black
927	Bengal Red	Red	Black	Black/Black	Black	Black	Black
928	Titanium Grey Pearl	Grey	Black	Black/Black	Black	Black	Black
934	Saddle Brown	Brown	Black	Black/Black	Black	Black	Black
952	Tacht Blue/Black	Blue	Black	Black/Black or Black/Blue or Z3	Black	Black or Black/Blue w/ Z4,3	Black
953	Platinum White/Black	White/Black	Black	Black/Black or Black/White or Z3	Black	Black or Black/White w/ Z4,3	Black
954A	Espresso Brown/Black	Brown/Black	Black	Black/Black or Black/Brown or Z3	Black	Black or Black/Brown w/ Z4,3	Black
957	Bengal Red/Black	Red/Black	Black	Black/Black or Black/Red or Z3	Black	Black or Black/Red w/ Z4,3	Black
958	Titanium Grey Pearl/Black	Grey/Black	Black	Black/Black or Black/Grey or Z3	Black	Black or Black/Grey w/ Z4,3	Black
964	Saddle Brown/Black	Brown/Black	Black	Black/Black or Black/Brown or Z3	Black	Black or Black/Brown w/ Z4,3	Black

Trims

VA2 - Natural Grain Walnut wood trim

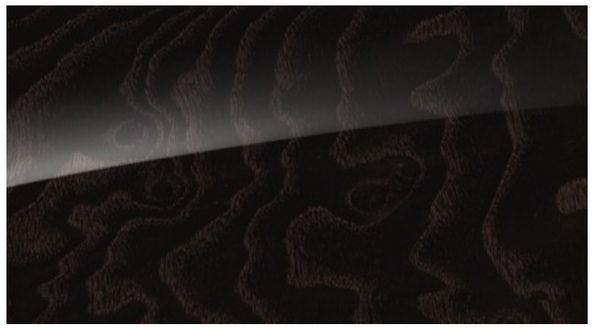

VA3 - Brown Ash wood trim

VA4 - Light Brown Zen wood trim

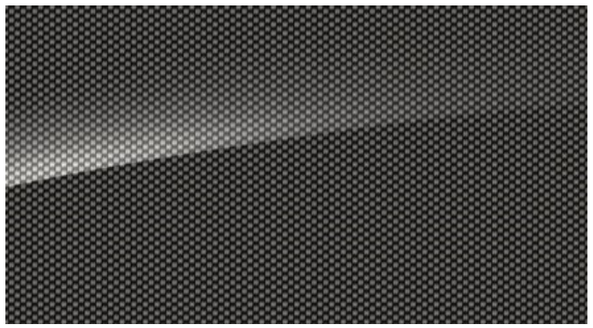

VA5 - Metal Weave trim

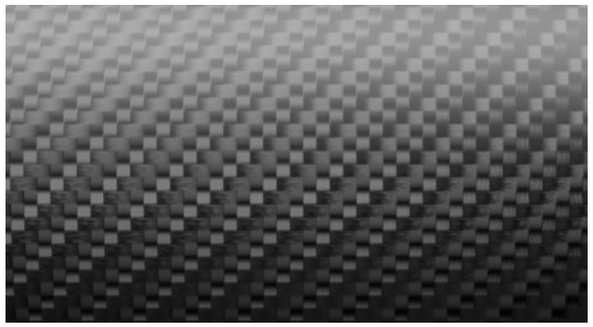

ZG6 - AMG Carbon Fiber trim

VA1 - G manufaktur Natural Grain Black-Flamed Ash wood trim

ZG2 - G manufaktur Black Piano Lacquer trim

Code	*Description*	*Availability*	*Price*
VA2	Natural Grain Walnut wood trim	G550W4	$0
VA3	Brown Ash wood trim	G550W4	$0
VA4	Light Brown Zen wood trim	G550W4	$0
VA5	Metal Weave trim	G550W4	$0
ZG6	AMG Carbon Fiber trim	G550W4	$3,700
VA1	G manufaktur Natural Grain Black-Flamed Ash wood trim	G550W4	$1,300
ZG2	G manufaktur Black Piano Lacquer trim	G550W4	$800

Packages

Code	Packages	Availability	MSRP
PA9	Seat Comfort Package ▪ Rapid Heating Front Seats ▪ Active Multicontour Front Seats with Massage and Driving Dynamic Function ▪ Ventilated Front Seats (adds perforation to the seat backrests and cushions)	All Models	$2,220
DG1	AMG Line (deletion of red stitching/red seat belts available) ▪ Seat Belts in Red (S39) 201/501 upholsteries only ▪ Brake calipers at the front with "Mercedes Benz" lettering (BS4) ▪ AMG body styling comprising inserts in the front and rear apron in high-gloss chrome plus flared wheel arches ▪ Sports exhaust system (K69) ▪ Multifunction Sport Steering Wheel in Nappa Leather (L5B) ▪ Contrast stitching in red 201/501 upholsteries only ▪ AMG Floor Mats (V43) ▪ Exterior protective strips with trim insert in brushed aluminum look (C98) ▪ 20" AMG Wheels (RK4 or R17)	All Models	$3,470
DC1	Night Package Requires AMG Line (DG1). Not available w/ Night Package Plus (DE9). Not available w/ the following paints: designo Mocha Black, (033), Black (040), designo Platinum Black (046), Magnetite Black (183) ▪ Wheel - Choice of ○ 20" AMG Twin 5-Spoke Wheels, Black (R16) ○ 20" AMG Multi-Spoke Wheels w/ Black Accents (RG6) ○ 20" AMG Multi-Spoke Wheels, Black (RJ5) ▪ Exterior protective strip with black trim insert in pinstripe look (C90) ▪ Trim elements in the bumper painted in obsidian black ▪ Darkened indicators and tail lights as well as headlamps ▪ Spare wheel cover ring painted in obsidian black ▪ Brush guard in black	All Models	$1,900
DE9	Night Package Plus Requires AMG Line (DG1). Not available w/ Night Package (DC1). Not available w/ the following paints: designo Mocha Black (033), Black (040), designo Platinum Black (046), Magnetite Black (183), Obsidian Black (197) and all magno paints ▪ MB Star at front an rear in black (CS1) ▪ Roof painted in black (F85) ▪ Exterior Lettering in Black (7U8) ▪ Content of Night Package (DC1) ▪ Wheel arch flares, front and rear bumpers in black (CK4)	All Models	$3,750
DF4 (New)	Night Package magno Requires AMG Line (DG1) and magno paints (051, 054, 056, 164, 271, 795). Not available w/ Night Package (DC1) or Night Package PLus (DE9). ▪ Spare wheel cover ring painted in Night Black magno (RB3) ▪ Wheel - Choice of ○ 20" AMG Twin 5-Spoke Wheels, Black (R16) ○ 20" AMG Multi-Spoke Wheels w/ Black Accents (RG6) ○ 20" AMG Multi-Spoke Wheels, Black (RJ5) ▪ MB Star at front and rear in black (CS1) ▪ Brush guard in Night Black magno ▪ Exterior protective strip with black trim insert in pinstripe look (C90) ▪ Wheel arch flares, front and rear bumpers in Night Black magno (CK9) ▪ Exterior Lettering in Black (7U8) ▪ Darkened indicators and tail lights as well as headlamps	All Models	$0
DB2	Exclusive Interior Package (only i.c.w. 5xx Series Leather) Not available w/ Exclusive Interior Package Plus (DB3), G manufaktur Interior Package (DD4) or G manufaktur Interior Package Plus (DD5) ▪ Seat upholstery in nappa leather ▪ Inside of tailgate finished in nappa leather in upholstery color ▪ Upper and lower parts of dashboard finished in leather with extended scope of topstitching (JC9) ▪ Black DINAMICA Headliner (FH2) ▪ Air vents in silver chrome ▪ Velour floor mats in black with edging in leather (VP3) ▪ Frameless Rearview Mirror (F75)	All Models	$5,000
DB3	Exclusive Interior Package Plus (only i.c.w. 8xx Series Leather) ▪ SR2 - Exclusive Interior Package Plus (SR2): ○ Upper and lower parts of dashboard finished in nappa leather with extended scope of topstitching (JC8) ○ Upper door panels and inside of tailgate in upholstery color ○ Seat upholstery in nappa leather with a diamond design layout ○ Velour floor mats in black with edging in leather (VP3) ○ Air vents in silver chrome ○ Black DINAMICA Headliner (FH2) ○ Frameless Rearview Mirror (F75) ○ Armrests in the doors and center console plus the complete door paneling in nappa leather ○ Upper door panels, kneepads plus inside of tailgate in nappa leather with diamond design ▪ 805 - Different components in conjunction with nappa leather in macchiato beige/espresso brown (805): ○ Macchiato Beige DINAMICA Headliner ○ Upper part of dashboard in nappa leather in espresso brown, lower part in macchiato beige ○ Steering wheel color in espresso brown ○ Velour floor mats in espresso brown with edging in macchiato beige ▪ Seat Comfort Package (PA9)	All Models	$12,200
DD4	G manufaktur Interior Package (only i.c.w. 9xx Series Leather) Not available w/ Exclusive Interior Package (DB2), Exclusive Interior Package Plus (DB3) or G manufaktur Interior Package Plus (DD5) ▪ GM1 - G manufaktur Interior Package (GM1): ○ Upper door panels, kneepads plus inside of tailgate in nappa leather ○ Upper door panels and inside of tailgate in upholstery color ○ Seat upholstery in nappa leather ○ Upper and lower parts of dashboard in leather with extended scope of topstitching (JC9) ○ G manufaktur badge on the grab handle for the front passenger ○ Floor mats in black velour with border in leather and matching contrasting topstitching, depending on upholstery color (VP3) ○ Frameless Rearview Mirror (F75) ○ Armrests in the doors and center console plus the complete door paneling in nappa leather ○ Black DINAMICA Headliner (FH2) ▪ Seat Comfort Package (PA9)	All Models	$8,100
DD5	G manufaktur Interior Package Plus (only i.c.w. 9xx Series Leather) Not available w/ Exclusive Interior Package (DB2), Exclusive Interior Package Plus (DB3) or G manufaktur Interior Package (DD4) ▪ GM2 - G manufaktur Interior Package Plus (GM2): ○ Upper door panels and inside of tailgate in upholstery color ○ Upper and lower parts of dashboard in nappa leather with extended scope of topstitching (JC8) ○ Seat upholstery in nappa leather with a diamond design layout ○ G manufaktur badge on the grab handle for the front passenger ○ Air vents in silver chrome ○ Floor mats in black velour with border in leather and matching contrasting topstitching, depending on upholstery color (VP3) ○ Frameless Rearview Mirror (F75) ○ Armrests in the doors and center console plus the complete door paneling in nappa leather ○ Upper door panels, kneepads plus inside of tailgate in nappa leather with diamond design ○ Black DINAMICA Headliner (FH2) ▪ Seat Comfort Package (PA9)	All Models	$13,050

Options

Factory Options

Code	Options	Availability	MSRP
A20	Suspension with Adaptive Damping Adjustment	All Models	$1,400
J25	12.3” Widescreen Instrument Cluster	All Models	$850
LH1	Steering Wheel Heating Not available w/ steering wheels L5B, VK7 or VK8	All Models	$250
PA2	All Season Floor Mats	All Models	$200
F85	Roof in Obsidian Black Not available w/ the following paints: Black (040), designo Platinum Black (046), Magnetite Black (183), Obsidian Black (197) and all magno paints	All Models	$1,200
RB3 (New)	Spare Wheel Cover Ring in Night Black magno Only available with magno paint (051, 054, 056, 164, 271, 795) or included in DF4 Night Package magno	All Models	$1,120
RB4	Spare Wheel Cover Ring in Obsidian Black Not available w/ the following paints: designo Mocha Black (033), Black (040), designo Platinum Black (046), Magnetite Black (183)	All Models	$1,000
RB5	Spare Wheel Cover Ring in Vehicle Color	All Models	$1,200
V36	Leather Grab Handles Requires Exclusive Interior Package (DB2) or Exclusive Interior Package Plus (DB3) or G manufaktur Interior Package (DD4) or G manufaktur Interior Package Plus (DD5)	All Models	$550
VK7	Wood/Leather Multifunction Steering Wheel in Light Brown Zen Requires Light Brown Zen wood trim (VA4) Not available w/ Steering Wheel Heating (LH1)	All Models	$600
VK8	Wood/Leather Multifunction Steering Wheel in Brown Ash Requires Brown Ash wood trim (VA3) Not available w/ Steering Wheel Heating (LH1)	All Models	$600
ZI3	Two-Tone Dashboard Incl. the lower part of the dashboard, the center armrest plus the side section of the center console in the same color shade as the seat appointments Requires G manufaktur Interior Package Plus (DD5) Requires one of the following upholsteries: 922, 923, 924, 927, 928, 934, 952, 953, 954, 957, 958, 964	All Models	$600
ZL3	Multifunction Steering Wheel in Two-Tone Nappa Leather Requires G manufaktur Interior Package (DD4) or G manufaktur Interior Package Plus (DD5) Requires one of the following upholsteries: 922, 923, 924, 927, 928, 934, 952, 953, 954, 957, 958, 964 As round steering wheel: Requires Multifunction Steering in Nappa Leather (VK9) and Steering Wheel Heating (LH1) As flat-bottom sport steering wheel: Requires Multifunction Sport Steering Wheel (L5B) and AMG Line (DG1)	All Models	$800

VPC Installed Options

Code	Options	Availability	MSRP
D09	Wheel Locking Bolts		$150

Specifications

G550W4

Chassis	
Drivetrain	
Transmission	9G-TRONIC Automatic Transmission
Transmission Speeds	9
Drive Configuration	All-wheel drive
Engine	
Engine Configuration	4.0L V8 biturbo engine
Power (hp)	416
Fuel Requirement (Octane)	91
Torque (lb-ft)	450
Compression	10.5 : 1
Fuel Tank Size (gallons)	26.42
Displacement (cc)	3,982
Performance	
Acceleration 0-60 mph (sec)	5.6
Top Speed (mph)	130
Fuel Economy	
Fuel Economy	13 mpg Cty/ 17 mpg Hwy/ 14 mpg Combined
Exterior Dimensions	
Vehicle Length (in.)	189.65
Vehicle Width with Mirrors (in.)	86.10
Vehicle Height (in.)	77.52
Wheelbase (in.)	113.78
Track Width Front/Rear (in.)	64.49
Curb Weight (lbs.)	5,553.7
Interior Dimensions	
Trunk Size (cubic feet)	38.14

G550

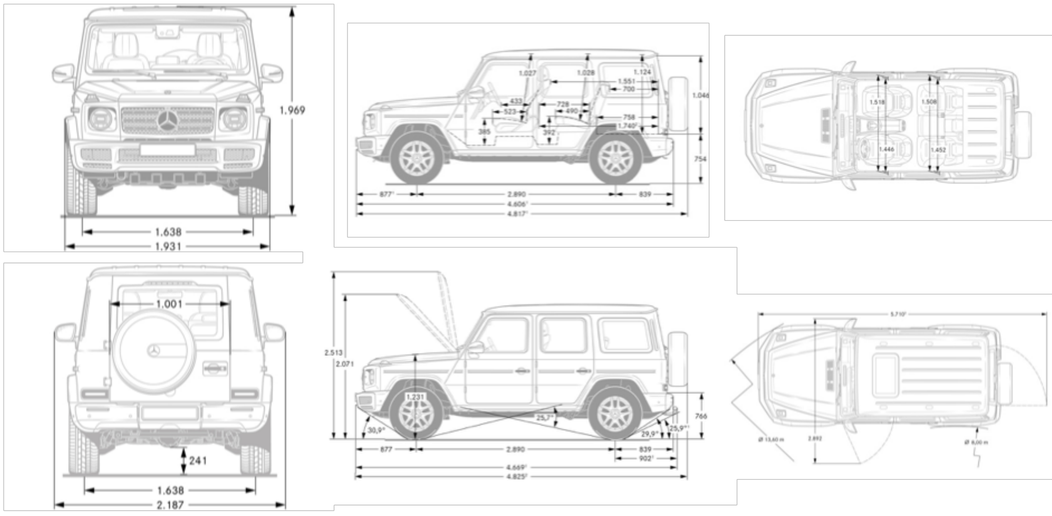

G550 w/ AMG Line

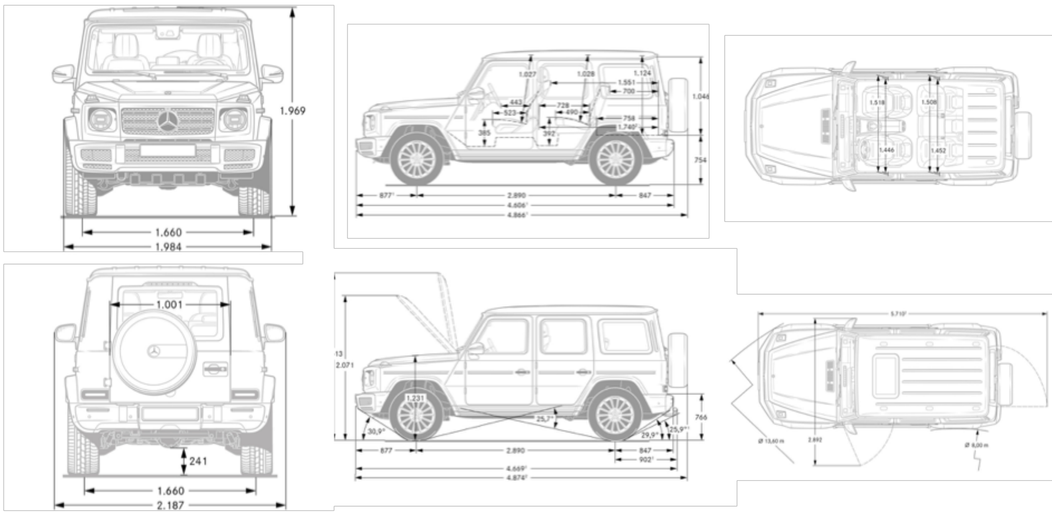

Options In Detail

Comparison Steering Wheels

Multifunction Steering Wheel in Nappa Leather (VK9)

Standard

- Touch Control Buttons
- Shift paddles in black

Multifunction Sport Steering Wheel in Nappa Leather (L5B)

Requires AMG Line (DG1) Not available w/ Steering Wheel Heating (LH1) Not available w/ Exclusive Interior Package Plus (DB3)

- Touch Control Buttons
- Shift paddles in silver chrome
- Perforated grip area
- Flattened bottom section

Multifunction Steering Wheel in Wood/Leather (VK7)

Requires Light Brown Zen wood trim (VA4) Not available w/ Steering Wheel Heating (LH1)

- Touch Control Buttons
- Shift paddles in black
- Grip area in nappa leather
- Top and bottom section in Light Brown Zen wood

Multifunction Steering Wheel in Wood/Leather (VK8)

Requires Brown Ash (VA3) wood trim Not available w/ Steering Wheel Heating (LH1)

- Touch Control Buttons
- Shift paddles in black
- Grip area in nappa leather
- Top and bottom section in Brown Ash wood

Multifunction Steering Wheel in Two-Tone Nappa Leather (ZL3)

Requires G manufaktur Interior Package (DD4) or G manufaktur Interior Package Plus (DD5)

As round steering wheel:

Requires Multifunction Steering in Nappa Leather (VK9) and Steering Wheel Heating (LH1)

As flat-bottom sport steering wheel:

Requires Multifunction Sport Steering Wheel (L5B) and AMG Line (DG1)

Multifunction Steering Wheel in Nappa Leather (VK9)

Standard

- Touch Control Buttons
- Shift paddles in black

Multifunction Sport Steering Wheel in Nappa Leather (L5B)

Requires AMG Line (DG1) Not available w/ Steering Wheel Heating (LH1) Not available w/ Exclusive Interior Package Plus (DB3)

- Touch Control Buttons
- Shift paddles in silver chrome
- Perforated grip area
- Flattened bottom section

Multifunction Steering Wheel in Wood/Leather (VK7)

Requires Light Brown Zen wood trim (VA4) Not available w/ Steering Wheel Heating (LH1)

- Touch Control Buttons
- Shift paddles in black
- Grip area in nappa leather
- Top and bottom section in Light Brown Zen wood

Multifunction Steering Wheel in Wood/Leather (VK8)

Requires Brown Ash (VA3) wood trim Not available w/ Steering Wheel Heating (LH1)

- Touch Control Buttons
- Shift paddles in black
- Grip area in nappa leather
- Top and bottom section in Brown Ash wood

Multifunction Steering Wheel in Two-Tone Nappa Leather (ZL3)

Requires G manufaktur Interior Package (DD4) or G manufaktur Interior Package Plus (DD5)

As round steering wheel:

Requires Multifunction Steering in Nappa Leather (VK9) and Steering Wheel Heating (LH1)

As flat-bottom sport steering wheel:

Requires Multifunction Sport Steering Wheel (L5B) and AMG Line (DG1)

Build Recommendations

G550W4 TBD

Exterior Color	589 G manufaktur Jupiter Red non-metallic	$6,500
Wheel	RJ5 20” AMG Multi-Spoke Wheels, Black	$300
Upholstery	201A Black w/ red stitching	$0
Trim	VA5 Metal Weave trim VA5 Metal Weave trim	$0 $0
Standalone Options	J25 12.3” Widescreen Instrument Cluster	$850
Estimated MSRP 1		$7,650

Gallery