2022 G-Class SUV Order Guide

Table of Contents

1	General Information
2	What's New
3	Models
4	Equipment
4.1	Standard Equipment
4.2	Exterior Paint Colors
4.3	Wheels
4.4	Interior Upholstery
4.6	Interior Trims
4.7	Packages
4.8	Options
4.9	Specifications
5	Options In Detail
6	Gallery

General Information

Important Note

The information presented in this guide is based on the most current information available and is intended for internal use only. Mercedes-Benz reserves the right to make changes at any time, without notice, to colors, materials, equipment, special specifications and models.

Pricing may not yet be finalized for some models or options.
Due to variances among monitors and printers the colors that appear on your screen and printouts may not be exact.
For illustrative purposes, some images may show vehicles with European Specification.

Revision History

Date	Description
03/08/2022	G550 and G63 information added to PIP

What's New

Extensively Revised Offering

- The MY22 G 63 features a high level of standard equipment
- As such, please reference all packages and options in detail prior to submitting orders
- New swaths of MANUFAKTUR paints, upholsteries, and single options are also available to order

Models

G63 (463.277)

- MSRP: $231,900
- Transmission: AMG SPEEDSHIFT PLUS 9G-TRONIC. Gear Ratios (:1) 1st-5.350, 2nd-3.240, 3rd-2.250, 4th-1.640, 5th-1.210, 6th-1.000, 7th-0.860, 8th-0.720, 9th-0.600, Reverse-4.800, Final Drive Ratio-3.450
- Acceleration - 0-100 km/h (Seconds): 4.5
- Engine: 32V DOHC V8 Biturbo
- Horsepower (SAE @ RPM): 577 @ 6,000
- Torque (lb-ft @ RPM): 627 @ 2,500-3,500
- Launch Date: Q3 2022

G63

MBC Standard Equipment

- 01U Navigation Services
- 09U Vehicle Monitoring
- 26U Remote Start
- A53 Active Lane Keeping Assist
- BS2 AMG Brake Calipers in Red
- E47 115V Outlet
- EK0 eCall System
- EM0 Live Traffic Information
- EO1 North American Head Unit
- EU8 Burmester Surround Sound System
- EZ8 Parking Assist PARKTRONIC
- F15 Electric Sliding Sunroof
- F75 Frameless Rear View Mirror
- FR2 Premium Ambient Lighting
- G44 AMG Speedshift Plus 9G-TRONIC
- J25 Widescreen Cockpit
- JA9 Traffic Sign Assist
- JP0 PRE-SAFE SYSTEM
- JW8 ATTENTION ASSIST
- L57 MULTIBEAM LED Lighting System (incl. Adaptive Highbeam Assist)
- P82 Advanced Anti-Theft
- PT1 Engineering Package
- RB5 Body Colour Spare Wheel Cover Ring
- SD0 Isofix Child-Seat Mountings
- T84 Side Running Boards
- U88 AMG DRIVE UNIT
- V57 EASY-PACK Load Compartment Cover
- W72 Heat-Insulating Dark Tinted Glass
- ZA2 Sea Packaging
- EF7 SIRIUS Satellite Radio
- IM6 Summer Performance Tires
- VA5 Metal Weave
- 08U Vehicle Set-Up
- 12B Owner's Manual
- A20 Adjustable Damping Suspension
- BB3 ESP
- C92 Exterior Protective Strip in Black
- EA2 Blind Spot Assist
- EK1 HERMES Module
- EM4 Live Traffic Information Driver Assistance Package
- EU4 COMAND Navigation
- EV1 Smartphone Integration
- EZ9 Active Distance Assist DISTRONIC
- F49 Heated Windscreen
- FB1 Partition Net
- FZ8 Anti-Theft Alarm System (ATA)
- HA1 Interior Air Ionization System
- JA6 Active Brake Assist
- JC0 Upper Dashboard in Leather
- JS1 360 Camera
- K81 Fuel Tank
- P76 Exclusive Interior Package
- PA8 Parking Package
- Q59 Trailer Hitch
- RY6 Tire Pressure Monitoring System
- SH1 Rear Side Airbags
- U78 AMG Performance Exhaust System
- V43 AMG Floormats
- VL9 AMG Performance Steering Wheel (Nappa Leather)
- YF9 Integrated Garage Door Opener
- ZU7 Canada Country Version
- RG2 21'' AMG 5-Twin Spoke Wheels
- 501A Black Nappa Leather

Paint

Non-Metallic Paints

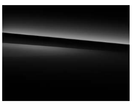

040 - Black
Standard. Not with DN2 or DG2 or DN3 or DG3.

149 - White

Metallic Paints

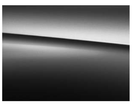

183 - Magnetite Black
Not with DN2 or DG2 or DN3 or DG3.

197 - Obsidian Black

660 - Rubellite Red

775 - Iridium Silver

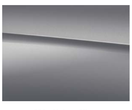

859 - Mojave Silver

890 - Cavansite Blue

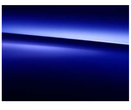

896 - Brilliant Blue

989 - Emerald Green

992 - Selenite Grey

G MANUFAKTUR Paints

124 - G MANUFAKTUR Classic Grey

464 - G MANUFAKTUR Desert Sand

589 - G MANUFAKTUR Jupiter Red

825 - G MANUFAKTUR Deep Green

904 - G MANUFAKTUR Dark Blue

934 - G MANUFAKTUR Vintage Blue

026 - G MANUFAKTUR Sea Blue Metallic

041 - G MANUFAKTUR Graphite Metallic

046 - G MANUFAKTUR Platinum Black Metallic
Not with DN2 or DG2 or DN3 or DG3.

162 - G MANUFAKTUR South Seas Blue Metallic

255 - G MANUFAKTUR Olive Metallic

300 - G MANUFAKTUR Periclase Green Metallic

693 - G MANUFAKTUR Tavertine Beige Metallic

963 - G MANUFAKTUR Iridium Grey Metallic

996 - G MANUFAKTUR Hyacinth Red Metallic

032 - G MANUFAKTUR Mystic Blue Bright Metallic

052 - G MANUFAKTUR Mystic Brown Bright Metallic

885 - G MANUFAKTUR Opalite White Bright Metallic

051 - G MANUFAKTUR Platinum MAGNO
Contains ZY6.

054 - G MANUFAKTUR Monza Grey MAGNO
Contains ZY6.

056 - G MANUFAKTUR Night Black MAGNO
Contains ZY6.

164 - G MANUFAKTUR Dark Olive MAGNO
Contains ZY6.

271 - G MANUFAKTUR Citrine Brown MAGNO
Contains ZY6.

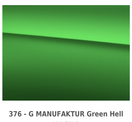

376 - G MANUFAKTUR Green Hell MAGNO
Contains ZY6.

658 - G MANUFAKTUR Copper Orange MAGNO
Contains ZY6.

659 - G MANUFAKTUR Opalite White MAGNO
Contains ZY6.

677 - G MANUFAKTUR Kalahari Gold MAGNO
Contains ZY6.

795 - G MANUFAKTUR Manganite Grey MAGNO
Contains ZY6.

Code	*Description*	*Availability*	*Price*
040	Black Standard. Not with DN2 or DG2 or DN3 or DG3.	All Models	$0
149	White	All Models	$0
183	Magnetite Black Not with DN2 or DG2 or DN3 or DG3.	All Models	$0
197	Obsidian Black	All Models	$0
660	Rubellite Red	All Models	$0
775	Iridium Silver	All Models	$0
859	Mojave Silver	All Models	$0
890	Cavansite Blue	All Models	$0
896	Brilliant Blue	All Models	$0
989	Emerald Green	All Models	$0
992	Selenite Grey	All Models	$0
124	G MANUFAKTUR Classic Grey	All Models	$4,000
464	G MANUFAKTUR Desert Sand	All Models	$4,000
589	G MANUFAKTUR Jupiter Red	All Models	$4,000
825	G MANUFAKTUR Deep Green	All Models	$4,000
904	G MANUFAKTUR Dark Blue	All Models	$4,000
934	G MANUFAKTUR Vintage Blue	All Models	$4,000
026	G MANUFAKTUR Sea Blue Metallic	All Models	$5,000
041	G MANUFAKTUR Graphite Metallic	All Models	$5,000
046	G MANUFAKTUR Platinum Black Metallic Not with DN2 or DG2 or DN3 or DG3.	All Models	$5,000
162	G MANUFAKTUR South Seas Blue Metallic	All Models	$5,000
255	G MANUFAKTUR Olive Metallic	All Models	$5,000
300	G MANUFAKTUR Periclase Green Metallic	All Models	$5,000
693	G MANUFAKTUR Tavertine Beige Metallic	All Models	$5,000
963	G MANUFAKTUR Iridium Grey Metallic	All Models	$5,000
996	G MANUFAKTUR Hyacinth Red Metallic	All Models	$5,000
032	G MANUFAKTUR Mystic Blue Bright Metallic	All Models	$5,000
052	G MANUFAKTUR Mystic Brown Bright Metallic	All Models	$5,000
885	G MANUFAKTUR Opalite White Bright Metallic	All Models	$5,000
051	G MANUFAKTUR Platinum MAGNO Contains ZY6.	All Models	$6,000
054	G MANUFAKTUR Monza Grey MAGNO Contains ZY6.	All Models	$6,000
056	G MANUFAKTUR Night Black MAGNO Contains ZY6.	All Models	$6,000
164	G MANUFAKTUR Dark Olive MAGNO Contains ZY6.	All Models	$6,000
271	G MANUFAKTUR Citrine Brown MAGNO Contains ZY6.	All Models	$6,000
376	G MANUFAKTUR Green Hell MAGNO Contains ZY6.	All Models	$6,000
658	G MANUFAKTUR Copper Orange MAGNO Contains ZY6.	All Models	$6,000
659	G MANUFAKTUR Opalite White MAGNO Contains ZY6.	All Models	$6,000
677	G MANUFAKTUR Kalahari Gold MAGNO Contains ZY6.	All Models	$6,000
795	G MANUFAKTUR Manganite Grey MAGNO Contains ZY6.	All Models	$6,000

Wheels

RG2 - 21'' AMG 5-Twin Spoke Wheels

Standard
21"
Summer Performance Tires (IM6)
Front: 285/45 (10J x 21), Rear: 285/45 (10J x 21)

RJ6 - 21'' AMG 5-Twin Spoke Wheels - Matte Black

Replaces RG2.
21"
Summer Performance Tires (IM6)
Front: 285/45 (10J x 21), Rear: 285/45 (10J x 21)

RG5 - 22'' AMG Cross-Spoke Forged Wheels

Replaces RG2.
22"
Summer Performance Tires (IM7)
Front: 295/40 (10J x 22), Rear: 295/40 (10J x 22)

RG4 - 22'' AMG Cross-Spoke Forged Wheels - Matte Black

Replaces RG2.
22"
Summer Performance Tires (IM7)
Front: 295/40 (10J x 22), Rear: 295/40 (10J x 22)

RJ9 - 22'' AMG Monoblock Forged Wheels

Replaces RG2.
22"
Summer Performance Tires (IM7)
Front: 295/40 (10J x 22), Rear: 295/40 (10J x 22)

RJ8 - 22'' AMG Monoblock Forged Wheels - Matte Black

Replaces RG2.
22"
Summer Performance Tires (IM7)
Front: 295/40 (10J x 22), Rear: 295/40 (10J x 22)

Code	*Wheel Size*	*Description*	*Wheel Dimensions*	*Mobility*	*Availability*	*MSRP*
RG2	21"	Standard	Front: 285/45 (10J x 21), Rear: 285/45 (10J x 21)	Summer Performance Tires (IM6)	All Models	$0
RJ6	21"	Replaces RG2.	Front: 285/45 (10J x 21), Rear: 285/45 (10J x 21)	Summer Performance Tires (IM6)	All Models	$500
RG5	22"	Replaces RG2.	Front: 295/40 (10J x 22), Rear: 295/40 (10J x 22)	Summer Performance Tires (IM7)	All Models	$2,500
RG4	22"	Replaces RG2.	Front: 295/40 (10J x 22), Rear: 295/40 (10J x 22)	Summer Performance Tires (IM7)	All Models	$2,500
RJ9	22"	Replaces RG2.	Front: 295/40 (10J x 22), Rear: 295/40 (10J x 22)	Summer Performance Tires (IM7)	All Models	$2,500
RJ8	22"	Replaces RG2.	Front: 295/40 (10J x 22), Rear: 295/40 (10J x 22)	Summer Performance Tires (IM7)	All Models	$2,500

Upholstery

Nappa Leather

501 - Black Nappa Leather

Standard. Contains P76. Not with DM1.

537 - Classic Red / Black Nappa Leather

Contains P76. Not with DM1.

545 - Truffle Brown / Black Nappa Leather

Contains P76. Not with DM1 or VA4.

575 - Macchiato Beige / Black Nappa Leather

Contains P76. Not with DM1.

Diamond Stitching Nappa Leather

801 - Black Nappa Leather with Diamond Stitching

Contains P77. Only with DM1.

805 - Macchiato Beige / Espresso Brown Nappa Leather with Diamond Stitching

Contains P77 and S44. Only with DM1 and FH6. Not with S39.

825 - Truffle Brown / Black Nappa Leather with Diamond Stitching

Contains P77. Only with DM1. Not with VA4.

827 - Classic Red / Black Nappa Leather with Diamond Stitching

Contains P77. Only with DM1.

G manufaktur Nappa Leather

902 - G MANUFAKTUR Black with Yacht Blue Stitching Nappa Leather

Contains P67. When DM1 is selected, contains P77.

903 - G MANUFAKTUR Black with White Stitching Nappa Leather

Contains P67. When DM1 is selected, contains P77.

904 - G MANUFAKTUR Black with Bronze Stitching Nappa Leather

Contains P67. When DM1 is selected, contains P77.

906 - G MANUFAKTUR Black with Lime Green Stitching Nappa Leather

Contains P67. When DM1 is selected, contains P77.

907 - G MANUFAKTUR Black with Red Stitching Nappa Leather

Contains P67. When DM1 is selected, contains P77.

909 - G MANUFAKTUR Black with Gold Stitching Nappa Leather

Contains P67. When DM1 is selected, contains P77.

912 - G MANUFAKTUR Black with Yacht Blue A-Band Nappa Leather

Contains P67. When DM1 is selected, contains P77.

916 - G MANUFAKTUR Black with Lime Green A-Band Nappa Leather

Contains P67. When DM1 is selected, contains P77.

917 - G MANUFAKTUR Black with Bengal Red A-Band Nappa Leather

Contains P67. When DM1 is selected, contains P77. Not with S39.

922 - G MANUFAKTUR Yacht Blue / Black Nappa Leather

Contains P67. When DM1 is selected, contains P77.

923 - G MANUFAKTUR Platium White / Black Nappa Leather

Contains P67. When DM1 is selected, contains P77.

924 - G MANUFAKTUR Espresso Brown / Black Nappa Leather

Contains P67. When DM1 is selected, contains P77.

927 - G MANUFAKTUR Bengal Red / Black Nappa Leather

Contains P67. When DM1 is selected, contains P77. Not with S39.

928 - G MANUFAKTUR Titanium Grey Pearl / Black Nappa Leather

Contains P67. When DM1 is selected, contains P77.

934 - G MANUFAKTUR Saddle Brown / Black Nappa Leather

Contains P67. When DM1 is selected, contains P77.

952 - G MANUFAKTUR Two-Tone Yacht Blue / Black Nappa Leather

Contains P67. When DM1 is selected, contains P77.

953 - G MANUFAKTUR Two-Tone Platinum White / Black Nappa Leather

Contains P67. When DM1 is selected, contains P77.

954 - G MANUFAKTUR Two-Tone Espresso Brown / Black Nappa Leather

Contains P67. When DM1 is selected, contains P77.

957 - G MANUFAKTUR Two-Tone Bengal Red / Black Nappa Leather

Contains P67. When DM1 is selected, contains P77. Not with S39.

958 - G MANUFAKTUR Two-Tone Titanium Grey Pearl / Black Nappa Leather

Contains P67. When DM1 is selected, contains P77.

964 - G MANUFAKTUR Two-Tone Saddle Brown / Black Nappa Leather

Contains P67. When DM1 is selected, contains P77.

Code	Description	Availability	Price
501	Black Nappa Leather Standard. Contains P76. Not with DM1.	All Models	$0
537	Classic Red / Black Nappa Leather Contains P76. Not with DM1.	All Models	$0
545	Truffle Brown / Black Nappa Leather Contains P76. Not with DM1 or VA4.	All Models	$0
575	Macchiato Beige / Black Nappa Leather Contains P76. Not with DM1.	All Models	$0
801	Black Nappa Leather with Diamond Stitching Contains P77. Only with DM1.	All Models	$0
805	Macchiato Beige / Espresso Brown Nappa Leather with Diamond Stitching Contains P77 and S44. Only with DM1 and FH6. Not with S39.	All Models	$0
825	Truffle Brown / Black Nappa Leather with Diamond Stitching Contains P77. Only with DM1. Not with VA4.	All Models	$0
827	Classic Red / Black Nappa Leather with Diamond Stitching Contains P77. Only with DM1.	All Models	$0
902	G MANUFAKTUR Black with Yacht Blue Stitching Nappa Leather Contains P67. When DM1 is selected, contains P77.	All Models	$1,500
903	G MANUFAKTUR Black with White Stitching Nappa Leather Contains P67. When DM1 is selected, contains P77.	All Models	$1,500
904	G MANUFAKTUR Black with Bronze Stitching Nappa Leather Contains P67. When DM1 is selected, contains P77.	All Models	$1,500
906	G MANUFAKTUR Black with Lime Green Stitching Nappa Leather Contains P67. When DM1 is selected, contains P77.	All Models	$1,500
907	G MANUFAKTUR Black with Red Stitching Nappa Leather Contains P67. When DM1 is selected, contains P77.	All Models	$1,500
909	G MANUFAKTUR Black with Gold Stitching Nappa Leather Contains P67. When DM1 is selected, contains P77.	All Models	$1,500
912	G MANUFAKTUR Black with Yacht Blue A-Band Nappa Leather Contains P67. When DM1 is selected, contains P77.	All Models	$1,500
916	G MANUFAKTUR Black with Lime Green A-Band Nappa Leather Contains P67. When DM1 is selected, contains P77.	All Models	$1,500
917	G MANUFAKTUR Black with Bengal Red A-Band Nappa Leather Contains P67. When DM1 is selected, contains P77. Not with S39.	All Models	$1,500
922	G MANUFAKTUR Yacht Blue / Black Nappa Leather Contains P67. When DM1 is selected, contains P77.	All Models	$3,000
923	G MANUFAKTUR Platium White / Black Nappa Leather Contains P67. When DM1 is selected, contains P77.	All Models	$3,000
924	G MANUFAKTUR Espresso Brown / Black Nappa Leather Contains P67. When DM1 is selected, contains P77.	All Models	$3,000
927	G MANUFAKTUR Bengal Red / Black Nappa Leather Contains P67. When DM1 is selected, contains P77. Not with S39.	All Models	$3,000
928	G MANUFAKTUR Titanium Grey Pearl / Black Nappa Leather Contains P67. When DM1 is selected, contains P77.	All Models	$3,000
934	G MANUFAKTUR Saddle Brown / Black Nappa Leather Contains P67. When DM1 is selected, contains P77.	All Models	$3,000
952	G MANUFAKTUR Two-Tone Yacht Blue / Black Nappa Leather Contains P67. When DM1 is selected, contains P77.	All Models	$3,000
953	G MANUFAKTUR Two-Tone Platinum White / Black Nappa Leather Contains P67. When DM1 is selected, contains P77.	All Models	$3,000
954	G MANUFAKTUR Two-Tone Espresso Brown / Black Nappa Leather Contains P67. When DM1 is selected, contains P77.	All Models	$3,000
957	G MANUFAKTUR Two-Tone Bengal Red / Black Nappa Leather Contains P67. When DM1 is selected, contains P77. Not with S39.	All Models	$3,000
958	G MANUFAKTUR Two-Tone Titanium Grey Pearl / Black Nappa Leather Contains P67. When DM1 is selected, contains P77.	All Models	$3,000
964	G MANUFAKTUR Two-Tone Saddle Brown / Black Nappa Leather Contains P67. When DM1 is selected, contains P77.	All Models	$3,000

Code	Upholstery	Seats	Floor Mats	Upper Dash/Lower Dash	Seat Belts	Steering Wheel	Headliner
501	Black Nappa Leather Standard. Contains P76. Not with DM1.	Black	Black	Black/Black	Black	Black	Black
537	Classic Red / Black Nappa Leather Contains P76. Not with DM1.	Red	Black	Black/Black	Black	Black	Black
545	Truffle Brown / Black Nappa Leather Contains P76. Not with DM1 or VA4.	Truffle Brown	Black	Black/Black	Black	Black	Black
575	Macchiato Beige / Black Nappa Leather Contains P76. Not with DM1.	Macchiato Beige	Black	Black/Black	Black	Black	Black
801	Black Nappa Leather with Diamond Stitching Contains P77. Only with DM1.	Black	Black	Black/Black	Black	Black	Black
805	Macchiato Beige / Espresso Brown Nappa Leather with Diamond Stitching Contains P77 and S44. Only with DM1 and FH6. Not with S39.	Macchiato Beige	Macchiato Beige	Espresso Brown / Macchiato Beige	Macchiato Beige (S44)	Espresso Brown	Macchiato Beige (FH6)
825	Truffle Brown / Black Nappa Leather with Diamond Stitching Contains P77. Only with DM1. Not with VA4.	Truffle Brown	Black	Black/Truffle Brown	Black	Black	Black
827	Classic Red / Black Nappa Leather with Diamond Stitching Contains P77. Only with DM1.	Classic Red	Black	Black/Classic Red	Black	Black	Black
902	G MANUFAKTUR Black with Yacht Blue Stitching Nappa Leather Contains P67. When DM1 is selected, contains P77.	Black	Black	Black/Black	Black	Black	Black
903	G MANUFAKTUR Black with White Stitching Nappa Leather Contains P67. When DM1 is selected, contains P77.	Black	Black	Black/Black	Black	Black	Black
904	G MANUFAKTUR Black with Bronze Stitching Nappa Leather Contains P67. When DM1 is selected, contains P77.	Black	Black	Black/Black	Black	Black	Black
906	G MANUFAKTUR Black with Lime Green Stitching Nappa Leather Contains P67. When DM1 is selected, contains P77.	Black	Black	Black/Black	Black	Black	Black
907	G MANUFAKTUR Black with Red Stitching Nappa Leather Contains P67. When DM1 is selected, contains P77.	Black	Black	Black/Black	Black	Black	Black
909	G MANUFAKTUR Black with Gold Stitching Nappa Leather Contains P67. When DM1 is selected, contains P77.	Black	Black	Black/Black	Black	Black	Black
912	G MANUFAKTUR Black with Yacht Blue A-Band Nappa Leather Contains P67. When DM1 is selected, contains P77.	Black with Yacht Blue A-Band	Black	Black	Black	Black	Black
916	G MANUFAKTUR Black with Lime Green A-Band Nappa Leather Contains P67. When DM1 is selected, contains P77.	Black with Lime Green A-Band	Black	Black	Black	Black	Black
917	G MANUFAKTUR Black with Bengal Red A-Band Nappa Leather Contains P67. When DM1 is selected, contains P77. Not with S39.	Black with Bengal Red A-Band	Black	Black	Black	Black	Black
922	G MANUFAKTUR Yacht Blue / Black Nappa Leather Contains P67. When DM1 is selected, contains P77.	Yacht Blue	Black	Black/Black or Black/Blue w/ ZI3	Black	Black	Black
923	G MANUFAKTUR Platium White / Black Nappa Leather Contains P67. When DM1 is selected, contains P77.	Platium White	Black	Black/Black or Black/White w/ ZI3	Black	Black	Black
924	G MANUFAKTUR Espresso Brown / Black Nappa Leather Contains P67. When DM1 is selected, contains P77.	Espresso Brown	Black	Black/Black or Black/Brown w/ ZI3	Black	Black	Black
927	G MANUFAKTUR Bengal Red / Black Nappa Leather Contains P67. When DM1 is selected, contains P77. Not with S39.	Bengal Red	Black	Black/Black or Black/Red w/ ZI3	Black	Black	Black
928	G MANUFAKTUR Titanium Grey Pearl / Black Nappa Leather Contains P67. When DM1 is selected, contains P77.	Titanium Grey Pearl	Black	Black/Black or Black/Grey w/ ZI3	Black	Black	Black
934	G MANUFAKTUR Saddle Brown / Black Nappa Leather Contains P67. When DM1 is selected, contains P77.	Saddle Brown	Black	Black/Black or Black/Brown w/ ZI3	Black	Black	Black
952	G MANUFAKTUR Two-Tone Yacht Blue / Black Nappa Leather Contains P67. When DM1 is selected, contains P77.	Yacht Blue / Black	Black	Black/Black or Black/Blue w/ ZI3	Black	Black	Black
953	G MANUFAKTUR Two-Tone Platinum White / Black Nappa Leather Contains P67. When DM1 is selected, contains P77.	Platinum White / Black	Black	Black/Black or Black/White w/ ZI3	Black	Black	Black
954	G MANUFAKTUR Two-Tone Espresso Brown / Black Nappa Leather Contains P67. When DM1 is selected, contains P77.	Espresso Brown / Black	Black	Black/Black or Black/Brown w/ ZI3	Black	Black	Black
957	G MANUFAKTUR Two-Tone Bengal Red / Black Nappa Leather Contains P67. When DM1 is selected, contains P77. Not with S39.	Bengal Red / Black	Black	Black/Black or Black/Red w/ ZI3	Black	Black	Black
958	G MANUFAKTUR Two-Tone Titanium Grey Pearl / Black Nappa Leather Contains P67. When DM1 is selected, contains P77.	Titanium Grey Pearl / Black	Black	Black/Black or Black/Grey w/ ZI3	Black	Black	Black
964	G MANUFAKTUR Two-Tone Saddle Brown / Black Nappa Leather Contains P67. When DM1 is selected, contains P77.	Saddle Brown / Black	Black	Black/Black or Black/Brown w/ ZI3	Black	Black	Black

Trims

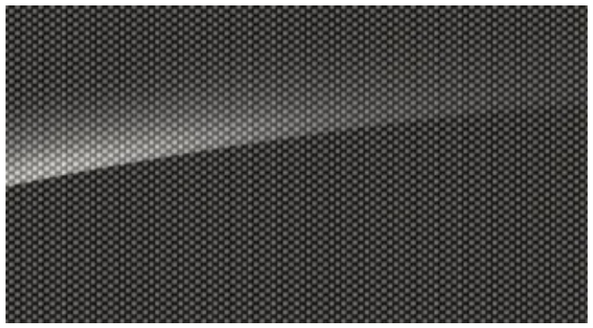

VA5 - Metal Weave

Standard

VA2 - Brown Open-Pore Walnut Wood

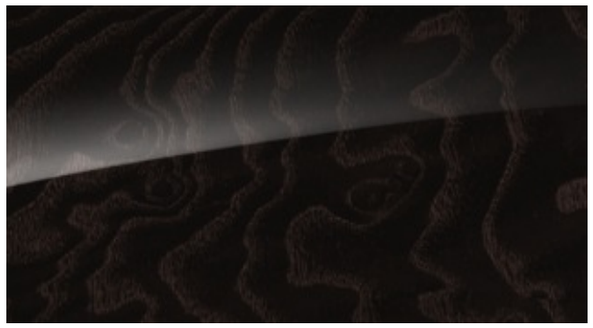

VA3 - Brown High-Gloss Ash Wood

VA4 - Light Brown High-Gloss Sen Wood

VA1 - G MANUFAKTUR Black Flamed Open-Pore Ash Wood

ZG2 - G MANUFAKTUR Piano Black Lacquer

ZG6 - AMG Carbon Fibre

Available as both stand-alone option and package component from DF1 package.
When package DF1 is ordered, the cost of this trim is included in the pacakge cost.

Code	*Description*	*Availability*	*Price*
VA5	Metal Weave Standard	All Models	$0
VA2	Brown Open-Pore Walnut Wood	All Models	$0
VA3	Brown High-Gloss Ash Wood	All Models	$0
VA4	Light Brown High-Gloss Sen Wood	All Models	$0
VA1	G MANUFAKTUR Black Flamed Open-Pore Ash Wood	All Models	$1,000
ZG2	G MANUFAKTUR Piano Black Lacquer	All Models	$1,000
ZG6	AMG Carbon Fibre Available as both stand-alone option and package component from DF1 package. When package DF1 is ordered, the cost of this trim is included in the pacakge cost.	All Models	$5,000

Packages

Code	Packages	Availability	MSRP
DX1	Exclusive Package ■ RB9 - Stainless Steel Spare Wheel Cover Ring. Replaces RB5 or (RB3 with 056U only) or (RB4 with 197U only). Alternatives: RB4 with DN2 only or RB3 with DN3 only. ■ P72 - ENERGIZING Comfort Control ■ PK2 - Drive Dynamic Multicontour Front Seats with Massage ■ V36 - Leather Covered Grab Handles	All Models	$5,000
DM1	G MANUFAKTUR Diamond Package Only with DX1. Compatible with all upholstery excluding 5XXA series upholstery. ■ P77 - SUPERIOR Line Interior Styling, replaces P76. ■ Diamond Pattern Stitching for Tailgate Pad ■ Diamond Pattern Stitching for Upholstery ■ JC1 - Upper Dashboard in Leather, replaces JC0. ■ Diamond Pattern Stitching for Kneepads ■ Diamond Pattern Stitching for Door Panels	All Models	$5,000
DF1	AMG Carbon Package Not with VA1 or VA2 or VA3 or VA4 or VA5 or ZG2 or L6K or L6L. ■ PT2 - AMG Performance Package ■ L6H - AMG Performance Steering Wheel (DINAMICA/Carbon Fibre). Replaces VL9. VL9 only when 805A is selected. ■ Z10 - Top Speed Increase ■ ZG6 - AMG Carbon Fibre Trim. Replaces VA5. ■ B14 - AMG Carbon Fibre Engine Cover	All Models	$8,500
DN2	AMG Night Package (Solid & Metallic Paints) Not with DN3, DG3, or 040U/183U/046U/all MAGNO paints. ■ P56 - AMG Night Package ■ RB4 - Obsidian Black Metallic Spare Wheel Cover Ring. Replaces RB5 or RB9. ■ CK6 - Darkened AMG-Specific Front Grille ■ Darkened Headlamps, Tail Lights, and Indicators ■ C55 - Underbody Protection in Obsidian Black Metallic. ■ Obsidian Black Metallic Front and Rear Bumper Trim Elements ■ FS0 - Obsidian Black Metallic Exterior Mirrors. Alternative: 197U.	All Models	$2,000
DG2	AMG Stealth Package (Solid & Metallic Paints) Only with DN2, RJ6/RG4/RJ8. Not with DN3, DG3, or 040U/183U/046U/all MAGNO paints. ■ CK4 - Obsidian Black Metallic Wheel Arches and Bumpers. Alternatives: 197U. ■ PAZ - AMG Night Package II ■ F85 - Obsidian Black Metallic Roof. Alternatives: 197U. ■ 7U8 - High Gloss Black Exterior Badging ■ CS1 - High Gloss Black Mercedes-Benz Star Logos (Front & Rear)	All Models	$3,500
DN3	AMG Night Package (MAGNO Paints) Only with MAGNO paints. Not with DN2, DG2. ■ P56 - AMG Night Package ■ CK6 - Darkened AMG-Specific Front Grille ■ Night Black MAGNO Front and Rear Bumper Trim Elements ■ RB3 - Night Black MAGNO Spare Wheel Cover Ring. Replaces RB5 or RB9. ■ FS1 - Night Black MAGNO Exterior Mirrors. Alternatives: 056U. ■ Darkened Headlamps, Tail Lights, and Indicators ■ C56 - Underbody Protection in Night Black MAGNO	All Models	$2,000
DG3	AMG Stealth Package (MAGNO Paints) Only with DN3, RJ6/RG4/RJ8 and MAGNO paints. Not with DN2, DG2. ■ AMG Night Package II - name ■ CS1 - High Gloss Black Mercedes-Benz Star Logos (Front & Rear) ■ 7U8 - High Gloss Black Exterior Badging ■ F86 - Night Black MAGNO Roof. Alternatives: 056U. ■ CK9 - Night Black MAGNO Wheel Arches and Bumpers. Alternatives: 056U.	All Models	$3,500

Options

Factory Options

Code	Options	Availability	MSRP
C44	Brush Guard (Night Black MAGNO) Only with DN3. Not with DN2.	All Models	$1,500
C74	Brush Guard (Obsidian Black Metallic) Only with DN2. Not with DN3.	All Models	$1,500
C75	Brush Guard Not with DN2 or DG2 or DN3 or DG3.	All Models	$1,500
VG0	Rubber Mat Set for Floor and Trunk Contains VL4 and PA2.	All Models	$500
BS1	AMG Brake Calipers in Silver Replaces BS2.	All Models	$0
L6K	AMG Performance Steering Wheel (Nappa/DINAMICA) Replaces VL9. Only with VA5 or ZG6 or ZG2 or VA7 or VA1. Not with 805A or DF1 or VA2 or VA3 or VA4.	All Models	$250
L6L	AMG Performance Steering Wheel (Piano Black Lacquer/Nappa) Replaces VL9. Only with ZG2. Not with 805A or DF1.	All Models	$650
LH1	Heated Steering Wheel Replaces U88.	All Models	$0
S39	G MANUFAKTUR Red Seat Belts Not with 805A or 917A or 927A or 957A or S44.	All Models	$250
VV3	G MANUFAKTUR Cherry Wood Load Compartment Floor	All Models	$3,000
ZI3	G MANUFAKTUR Two-Tone Nappa Leather Dashboard Requires DM1 and (922A or 923A or 924A or 927A or 928A or 934A or 952A or 953A or 954A or 957A or 958A or 964A upholstery).	All Models	$1,000

Specifications

G63

Chassis	
Drivetrain	
Transmission	AMG SPEEDSHIFT PLUS 9G-TRONIC. Gear Ratios (:1) 1st-5.350, 2nd-3.240, 3rd-2.250, 4th-1.640, 5th-1.210, 6th-1.000, 7th-0.860, 8th-0.720, 9th-0.600, Reverse-4.800, Final Drive Ratio-3.450
Drive Configuration	All-Wheel Drive
Engine	
Engine	32V DOHC V8 Biturbo
Displacement (cm3)	3,982
Bore (mm)	98.00
Stroke (mm)	90.50
Horsepower (SAE @ RPM)	577 @ 6,000
Torque (lb-ft @ RPM)	627 @ 2,500-3,500
Fuel Type	Premium Unleaded
Compression Ratio	8,6:1
Fuel Capacity (L)	100 (12 L reserve)
Electrical	
On-board Electrical System Voltage (V)	14
Performance	
Acceleration - 0-100 km/h (Seconds)	4.5
Top Speed (Electronically Limited - km/h)	210 (240 with top-speed increase)
Fuel Economy	
City fuel economy	18.3L/100KM
Highway fuel economy	15L/100KM
Exterior Dimensions	
Length (mm)	4,873
Width - Excluding Mirrors (mm)	1,984
Width - Mirrors Folded (mm)	2,013
Width - Including Mirrors (mm)	2,187
Height (mm)	1,966
Wheelbase (mm)	2,890
Turning Circle (m)	13.51
Track Width - Front (mm)	1,654
Track Width - Rear (mm)	1,654
Curb Weight (kg)	2,650
Weight Distribution - Front (%)	TBD
Weight Distribution - Rear (%)	TBD
Maximum Gross Vehicle Weight (kg)	3,200
Maximum Payload (kg)	550
Maximum Front Axle Load (kg)	1,550
Maximum Rear Axle Load (kg)	1,900
Maximum Roof Load (kg)	150
Permissible Trailer Load - braked (kg)	750 / 3,500
Permissible rear axle load (when towing a trailer) (kg)	1,900
Wheels and Tires	
Interior Dimensions	
Headroom - Front (mm)	1,027
Headroom - Rear (mm)	1,028
Luggage Capacity (L)	454 - 1,246
Body/Suspension	
Steering	Electromechanical Rack-and-pinion
Braking System	ABS with Active Brake Assist
Brake Disc Ventilation	Front and Rear
Front Brake Type / Diameter (mm)	Disc / 354
Rear Brake Type / Diameter (mm)	Disc / 345
Front Suspension	Independent (Double wishbone)
Rear Suspension	Rigid axle
Drag Coefficient	0.54

Options In Detail

G manufaktur program

Special customers have special requirements: no other model series can demonstrate such a high degree of **individualization** as the G-Class.

With G manufaktur, Mercedes-Benz has developed an exclusive design and equipment line exclusively for the icon among off-road vehicles. Maximum quality, exclusive details and a coordination between the exterior and interior characterize these **high-quality handcrafted products**.

The high-class nappa leather for the different seat variants is produced by a saddlery in Graz using traditional craftsmanship techniques, and Mercedes-Benz then completes the corresponding seat. The leather production is extremely time-consuming and takes around five times longer than for a Mercedes-Benz A-Class. However, it is only in this way that the exclusive quality of the G manufaktur products can be guaranteed – **"Handmade in Graz"**.

The G manufaktur program replaces the designo line of equipment on the G-Class.

AMG Drive Unit (U88) – Standard

The AMG Performance steering wheels with AMG steering wheel buttons are reminiscent of Formula 1 steering wheels in terms of their operation and characteristics. The ergonomic positioning of the additional steering wheel buttons in the **immediate grip area**, allows the driver to keep their hands on the steering wheel at all times.

The individual steering wheel buttons are implemented as modern, mini displays. Pictograms on the buttons visualize the AMG-specific function which can be accessed in each case.

ENERGIZING Comfort Control (P72) - Included in DX1

The ENERGIZING comfort control transforms your vehicle into an oasis of well-being through the intelligent combination of comfort functions such as **air conditioning and lighting**. Six perfectly compiled programs can be activated easily to help relieve stress or contribute to alertness or long journeys.

Exterior Styling

G-Class Dimensions - G 63

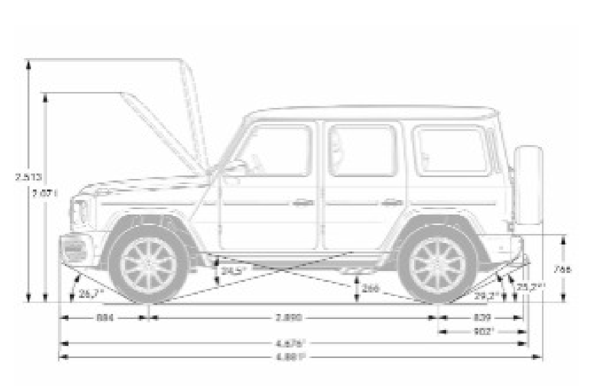

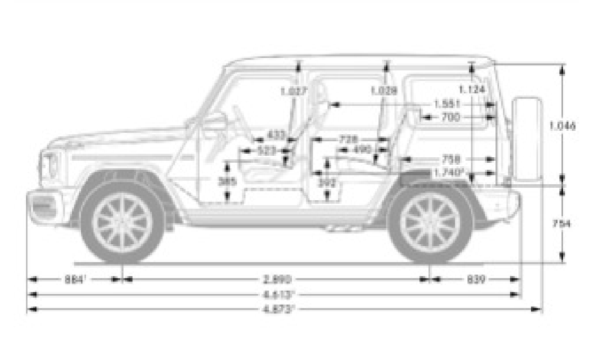

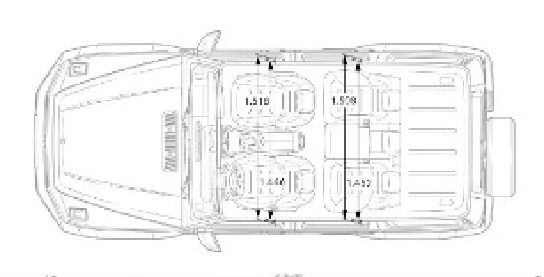

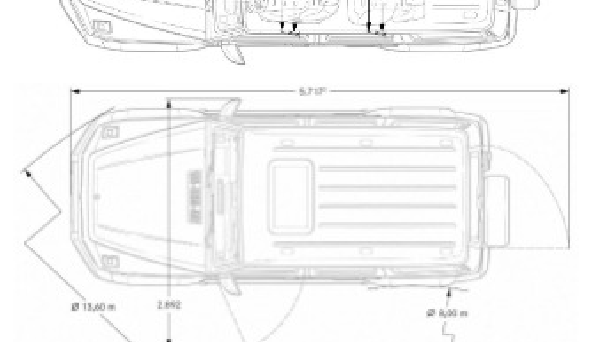

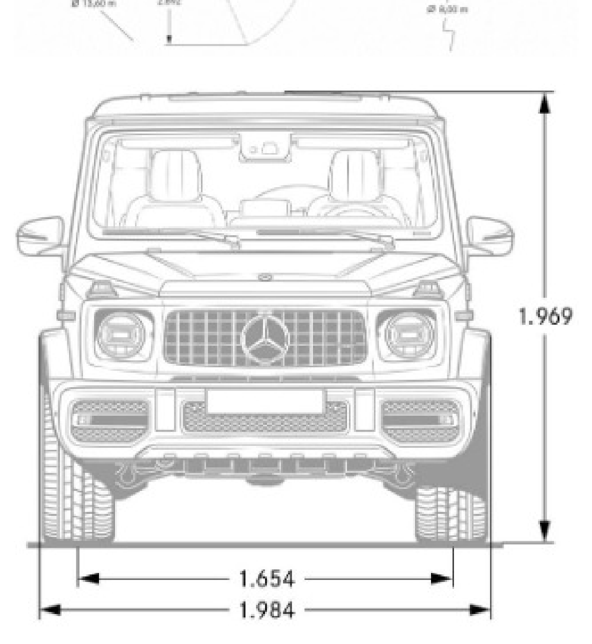

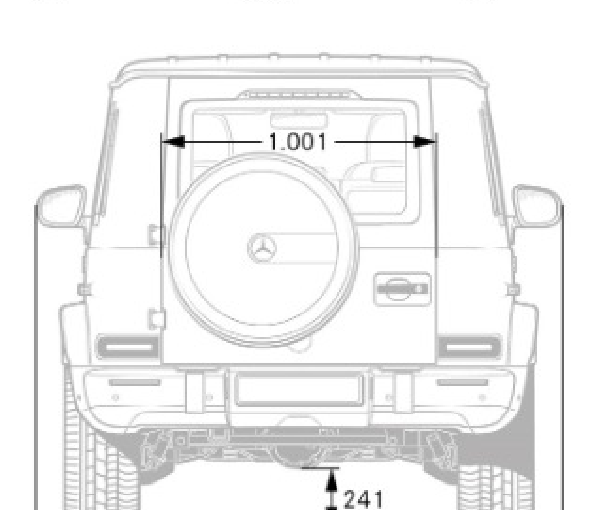

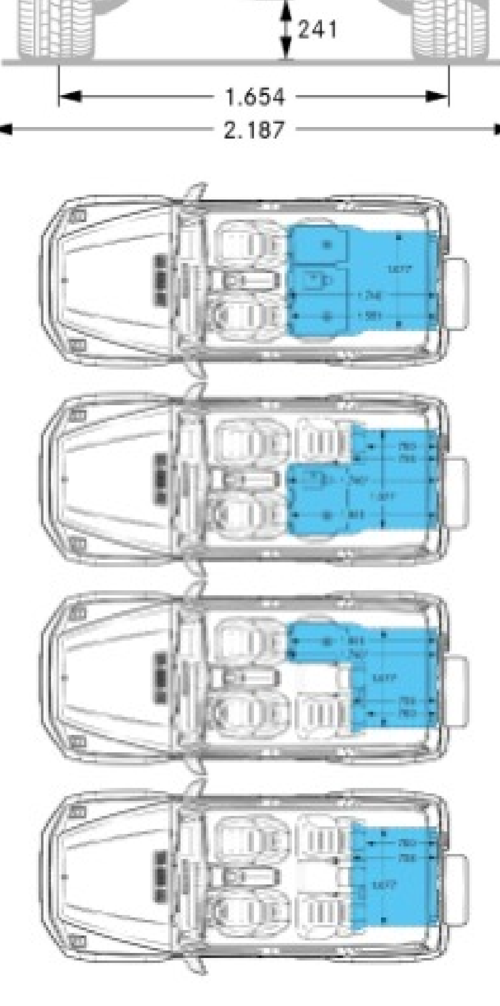

G-Class Off-road Capabilities

Widescreen Cockpit

Widescreen Cockpit

Standard, with COMAND Online & Telematics Generation NTG 5.5

Overview:

- Digital instrument cluster and multimedia system display under a continuous glass panel, each with a high-resolution display with **12.3-inch screen diagonal**
- 3 display styles **"Classic", "Sporty" and "Progressive"** can be selected by the driver
- Dynamic presentation with respect to content and size of the information displayed
- COMAND Online with NTG 5.5 including the following:
  - Fast HDD navigation with 3D map display
  - Smartphone integration via Android Auto or Apple CarPlay
  - Integrated USB Media Interface
  - SiriusXM Satellite Radio
  - Bluetooth® hands-free and audio streaming
  - SDHC card reader
  - HD Radio tuner
  - LINGUATRONIC voice-operated control system

THERMOTRONIC

THERMOTRONIC

Standard, Automatic Climate Control with 3 Climate Zones

Overview:

- **3 climate zones** with individual temperature controls (driver's side, front passenger side and rear)
- **3 climate styles** for setting the airflow – "diffuse", "medium" or "focused"
- Automatic control of temperature, air distribution and airflow ("Auto" button)
- Air distribution for driver's and front passenger sides individually and separately adjustable
- **Constant monitoring of incoming air for harmful gases** with automatic air recirculation setting
- Sensors keep the climate constant at the desired level in each zone
- Rear operating unit for regulating the temperature and airflow in the rear
- A **fine-particle activated charcoal filter** improves the air quality in the vehicle. It filters dust, soot and pollen from the air and also reduces pollutants and odours
- **Dew point sensor** prevents windows from misting up and ensures energy-efficient climate control
- Rear centre air vents, air vents in the B-pillars and a booster fan help to enhance climate comfort in the rear compartment
- Residual engine heat button to provide heating or ventilation when the engine is switched off (country-specific)

Ambient Lighting

Ambient Lighting

Standard, 64 colours and 10 colour schemes

Overview:

- The ambient lighting in **64 colours** gives the light a uniquely diverse style and showcases the interior like a work of art
- **Eight colour schemes** each consist of two colours – the Widescreen Cockpit and the footwell are in the same colour, while the trim level forms a contrast
- Two further colour schemes each contain five colours – these divide the vehicle into the levels "upper display and roofline", "lower display", "feature line (trim)", "centre console and cup holder" and footwell
- Every display style of the Widescreen Cockpit is oriented towards a matching colour scheme: **"Glacier Blue" for Classic, "Red Moon" for Sporty, "Dawn Blue" for Progressive**
- The colours are static or slowly replace each other in **Dynamic mode** to produce a constant change of colour
- Special emotively appealing effects: A light show welcomes the driver, and the climate control indicates in colour via the ambience lighting whether a **warmer or colder temperature** is being set
- All 64 colours are also individually selectable
- Just as variably adjustable is the brightness of the LEDs, with **five levels and four zones**: Widescreen Cockpit, front seats, rear and complete dimming zone

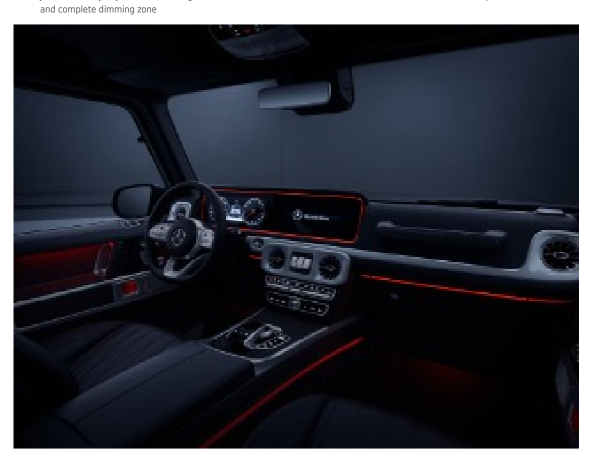

360° camera

360° camera

Standard

Overview:

- **Four networked cameras to monitor all four sides** of the vehicle when parking, maneuvering and in other driving situations
- The vehicle and its surroundings are shown in a **bird's-eye view** on the multimedia system display
- Display on the media screen: the perspective is automatically made available based on the gear selection and can also be chosen manually
- Virtual guide lines along the outer contour of the vehicle
- Trailer mode: additional display option with zoom function (only for vehicles with trailer coupling)

Brush Guard

Brush Guard

Optional on G 550 SUV and G 63 SUV

New design and placement for the optional AMG Brush Guard on the G 63 to allow for an unobstructed view for the 360 camera.

Ladder-Type Frame

Ladder-Type Frame

The ladder-type frame has formed the basis for the G-Class since the very beginning. With its revision, the vehicle achieves a new level in terms of resilience in off-road terrain. The ladder-type frame consists of sheet steel of up to **4 mm** in thickness with closed side members and crossmembers. This design is much more robust and better suited to off-road use than a self-supporting body.

Key features of the body:

- Torsionally rigid ladder-type frame – with MAG-welded seams and points assembled out of sheet steel which is up to **3.5 mm** thick
- Comprehensive weight reduction of more than **150 kg**, achieved by the processing of light and high-strength materials such as aluminium
- Extremely sturdy frame construction for use in very demanding cross-country terrain, prevents the body from being twisted and damaged
- The design protects the major assemblies, fuel tank and exhaust system when the vehicle makes contact with the ground, e.g. when driving over obstacles
- Vehicle floor additionally coated with plastic (using cathodic dip priming and powder-coating processes)
- All bodies are carefully primed in a cataphoretic dip process and then given several coats of paint
- Extensive surface treatment results in long-lasting resistance to water, snow, road salt and sand

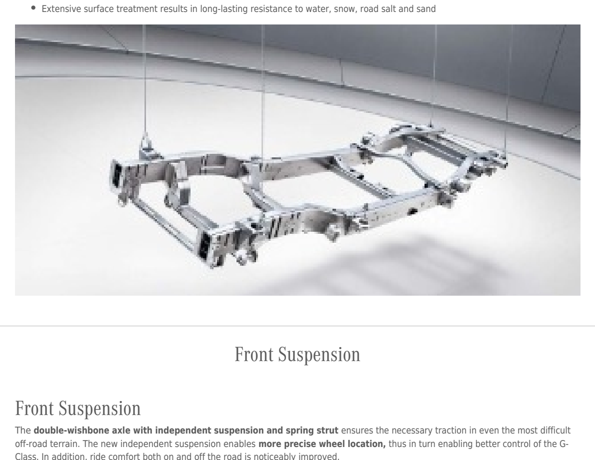

Front Suspension

Front Suspension

The **double-wishbone axle with independent suspension and spring strut** ensures the necessary traction in even the most difficult off-road terrain. The new independent suspension enables **more precise wheel location,** thus in turn enabling better control of the G-Class. In addition, ride comfort both on and off the road is noticeably improved.

Key features of the **double-wishbone front suspension**:

- Good driving dynamics, excellent road roar and tyre vibration characteristics as well as good off-road capability
- Minimizes the transfer of vibrations to the body by complexly isolating the front axle
- Use of weight-optimised, aluminium forged parts for the two transverse control arms and the steering knuckles

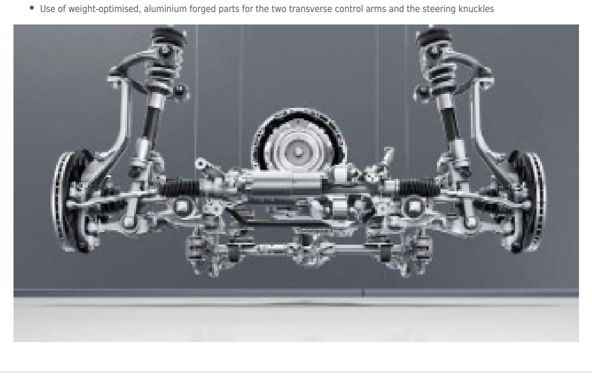

Rear Suspension

Rear Suspension

The **extremely robust rigid axle with high degree of axial twist** supports the chassis and the body. The rigid axle is connected to the ladder-type frame via two lower and upper trailing arms as well as one Panhard rod which prevents sideways movements in the suspension in relation to the vehicle body and rigid rear axle and ensures the necessary **traction in even the most difficult off-road terrain** and according to the surface.

Key features of the rigid axle (rear):

- Large ground clearance because – in contrast to independent wheel suspension – **the axle is automatically raised accordingly when a wheel rolls over an obstacle**
- High articulation capacity of the axles and long spring travel result in optimum surface contact for the wheels

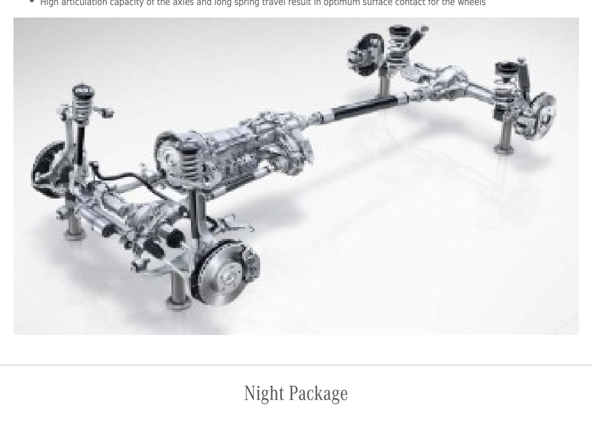

Night Package

AMG Night Package

Optional

Components:

- AMG-specific radiator grille, dark chrome-platedDark-tinted turn indicators and tail lamps plus headlamps
- Dark-tinted turn indicators and tail lamps plus headlamps

Depending on the choice of paint finish, the following components are finished in obsidian black or night black magno:

- Outside mirror housings
- Inserts in the bumper
- Simulated underguard
- Spare wheel ring

AMG Stealth Package

Optional with AMG Night Package

- **An option to add the roof, wheel arches, front & rear star logos, exterior badging and bumpers in black is also now available shown below:**

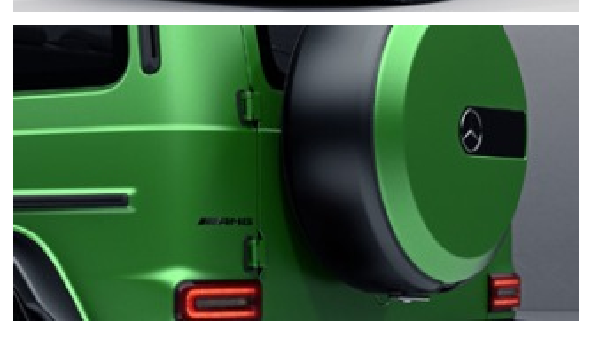

Steering Wheel Overview

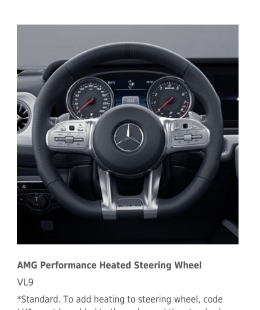

AMG Performance Heated Steering Wheel

VL9

*Standard. To add heating to steering wheel, code LH1 must be added to the order and the standard AMG DRIVE UNIT (U88) must be replaced.

AMG Performance Steering Wheel (Nappa/DINAMICA)

L6K

*Optional. To add heating to steering wheel, code LH1 must be added to the order and the standard AMG DRIVE UNIT (U88) must be replaced.

Only with VA5 or ZG6 or ZG2 or VA7 or VA1 . Not with 805A or DF1 or VA2 or VA3 or VA4.

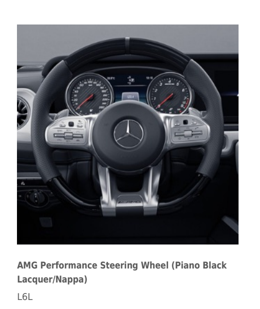

AMG Performance Steering Wheel (Piano Black Lacquer/Nappa)

L6L

*Optional. To add heating to steering wheel, code LH1 must be added to the order and the standard AMG DRIVE UNIT (U88) must be replaced.

Only with ZG2. Not with 805A or DF1.

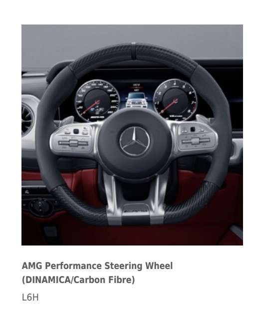

AMG Performance Steering Wheel (DINAMICA/Carbon Fibre)

L6H

*Part of DF1 package. To add heating to steering wheel, code LH1 must be added to the order and the standard AMG DRIVE UNIT (U88) must be replaced.

Gallery