2021 GLE SUV Order Guide

Table of Contents

1	General Information
2	What's New
3	Models
4	Equipment
4.1	Standard Equipment
4.2	Exterior Paint Colors
4.3	Wheels
4.4	Interior Upholstery
4.6	Interior Trims
4.7	Packages
4.8	Options
4.9	Specifications
5	Options In Detail
6	Gallery

General Information

Important Note

The information presented in this guide is based on the most current information available and is intended for internal use only. Mercedes-Benz reserves the right to make changes at any time, without notice, to colors, materials, equipment, special specifications and models.

Pricing may not yet be finalized for some models or options.
Due to variances among monitors and printers the colors that appear on your screen and printouts may not be exact.
For illustrative purposes, some images may show vehicles with European Specification.

Revision History

Date	Description
08/28/2020	Updated availability of Leather interiors. 214, 284, & 885 are not available as of November production
04/28/2020	Model Year 21 Initial Release - prices subject to change

What's New

Exterior	
• AMG-specific radiator grille with AMG logo and vertical lamellas in high-gloss chrome	• "18 BYELIMO AVANTI-X" badging on front wings (LF 4I 6) • Black AMG-specific exterior mirror shells
• AMG side skirts vehicle color	• Spoiler lip in vinyl
• Exterior mirror casings in vehicle color	• New large 20-22" wheels
• Window frames in high gloss chrome	• AMG Performance tire pressure sensors
• Rear double-round tailpipes in high gloss chrome (LF 3I)	• All tires in the AMG Black wpcr with Rim Bolts in chrome
• Rear bumper with AMG-specific diffuser insert	• Rear Wiper Deactivation
• Two centered horn tailpipes in high-gloss chrome (LF 4I 6)	• Active Dynamic Engine Mounts (LF 4I 6)
	• Electronic Locking Differential (LF 4I 6)

Interior	
• Progressive athens SLC interior design	• Touchpad on Center Console
• AMG-specific multifunction sport leather steering wheels with touch-controllers	• 3 USB ports (1 in the front, 1 in rear)
• Instrument cluster with AMG cassette design and specific AMG functions	• Rear-film option
• W464 User Interface	• two dismount grab handles on the center console
• NFC Wireless Charging	• SUV-specific storage compartments
• 12.3" Digital Instrument Cluster	
• 12.3" Media Display with Touchscreen	

Mercedes-Benz User Experience (MBUX)

MBUX - the newest head unit generation from Mercedes-Benz

Standard on all GLE models

- Offered with two 12.3" digital displays as standard equipment
- MBUX was designed for a touch interface with intuitive operation
- There are four ways of interacting with the system:
  - An all-new Touchpad, Touch Control Buttons on the steering wheel, a touchscreen center display, and an all-new generation of Voice Control
- Multiple users can set up Profiles which save their settings for future use
  - Including: seat settings, music preferences and radio settings, phone settings, themes/moods, Bluetooth connections, etc.
- Over time, the system learns more about it's owners and creates Suggestions based on past behavior of the user
- Whole groups of settings can be saved together in the form of a Theme/Mood
  - Including: ambient lighting, climate control, music preferences, and setup of the Digital Instrument Cluster and head unit display, etc.
- Using over-the-air updates, MBUX can continuously be improved over time
- The system is very quick and responsive due to it's impressive graphics processing and computing power

Voice Control

"Hey Mercedes, I need a cup of coffee"
Hey Mercedes
Hey Mercedes
Hey Mercedes

Models

GLE53W4 (167.161)

- MSRP: $72,350
- Transmission: AMG SPEEDSHIFT TCT 9-speed automatic transmission
- Acceleration 0-60pmg (sec): 5.2
- Engine Configuration: AMG-Enhanced 3.0L I6 Turbo Engine
- ICE Power (hp): 429 hp
- Torque (lb-ft): 384 lb-ft
- Launch Date: Mid 2020

GLE63W4S (167.189)

- MSRP: $113,950
- Transmission: AMG SPEEDSHIFT TCT 9-speed automatic transmission
- Acceleration 0-60pmg (sec): 3.7
- Engine Configuration: Handcrafted AMG 4.0L V8 Bi-Turbo Engine
- ICE Power (hp): 603 hp
- Torque (lb-ft): 627 lb-ft
- Launch Date: Mid 2020

Standard Equipment

GLE53W4

Performance & Handling

- AMG SPEEDSHIFT TCT 9-speed automatic transmission
- EQ Boost Starter-Alternator
- AMG Performance 4MATIC+® all-wheel drive
- Adaptive Damping Plus
- AMG-Enhanced 3.0L I6 Turbo engine
- AMG DYNAMIC SELECT
- AMG RIDE CONTROL+ Suspension based on AIRMATIC
- 20” AMG Wheels

Comfort & Convenience

- KEYLESS-START
- Power tilt/sliding sunroof
- AMG Performance Steering wheels with touch controllers
- MBUX User Interface
- 12.3“ Media Display with touchscreen
- Apple CarPlay and Android Auto
- NFC Wireless Charging
- Active Parking Assist
- Power Front Seats with 4-Way Lumbar Support and Driver Memory
- Garage Door Opener
- Power Lift gate
- Privacy Glass
- Roof rails
- KEYLESS-GO®
- 115V Power Outlet
- Remote Start
- LED headlamps
- Touchpad in center console
- 12.3“ fully digital instrument cluster
- Smartphone Integration
- 5 USBs (3 in front, 2 in rear)
- MB Navigation with Live Traffic and Map Updates for 3 years
- Heated Front Seats
- 2-Zone Climate control
- Load Compartment Cover
- Double Sun Visors
- Power Folding Mirrors, Auto-dimming Driver and Rearview Mirrors, Mirror Logo Projector
- HANDS-FREE-ACCESS
- 64 Color Ambient Lighting
- Burmester® Surround Sound System

Safety & Security

- Blind Spot Assist
- Rear View Camera
- Active Brake Assist
- Anti-Theft Alarm System
- Power folding Mirrors, Auto-dimming Driver and Rearview Mirrors
- ATTENTION ASSIST®
- PRE-SAFE®
- eCall-Emergency System
- Active Lane Keeping Assist

Performance & Handling

- AMG SPEEDSHIFT TCT 9-speed automatic transmission
- EQ Boost Starter-Alternator
- AMG Performance 4MATIC+® all-wheel drive
- Adaptive Damping Plus
- Active Dynamic Engine Mounts
- Active Curve System
- Handcrafted AMG 4.0L V8 biturbo engine
- AMG DYNAMIC SELECT
- AMG ACTIVE RIDE CONTROL based on AMG RIDE CONTROL+
- 21” AMG Wheels with High-Performance Summer Tires
- Electronic Locking Differential
- AMG High-Performance Braking System

Comfort & Convenience

- KEYLESS-START
- Power tilt/sliding sunroof
- KEYLESS-GO®
- Touchpad in center console
- HANDS-FREE-ACCESS
- 12.3“ fully digital instrument cluster
- Smartphone Integration
- NFC Wireless Charging
- Active Parking Assist
- Power Front Seats with 4-Way Lumbar Support and Driver Memory
- Garage Door Opener
- Power Lift gate
- Double Sun Visors
- Mirror Package (Power Folding Mirrors, Auto-dimming Driver and Rearview Mirrors, Mirror Logo Projector)
- 64 Color Ambient Lighting
- Burmester® Surround Sound System
- Remote Start
- Active LED headlamps with Adaptive Highbeam Assist
- AMG Performance Steering wheels with touch controllers
- MBUX User Interface
- 5 USBs (3 in front, 2 in rear)
- 12.3“ Media Display with touchscreen
- Apple CarPlay and Android Auto
- MB Navigation with Live Traffic and Map Updates for 3 years
- Heated and Ventilated Front Seats
- 2-Zone Climate control
- Load Compartment Cover
- Spare tire
- Privacy Glass
- Roof rails
- 115V Power Outlet
- SiriusXM Radio

Safety & Security

- Blind Spot Assist
- Surround View System
- Active Brake Assist
- Anti-Theft Alarm System
- Power folding Mirrors, Auto-dimming Driver and Rearview Mirrors
- ATTENTION ASSIST®
- PRE-SAFE®
- eCall-Emergency System
- Active Lane Keeping Assist

Paint

Non-Metallic Paints

040U - Black

149U - Polar White

Metallic Paints

197U - Obsidian Black

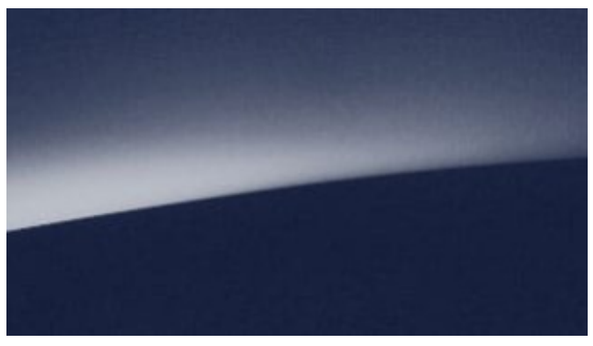

890U - Lunar Blue

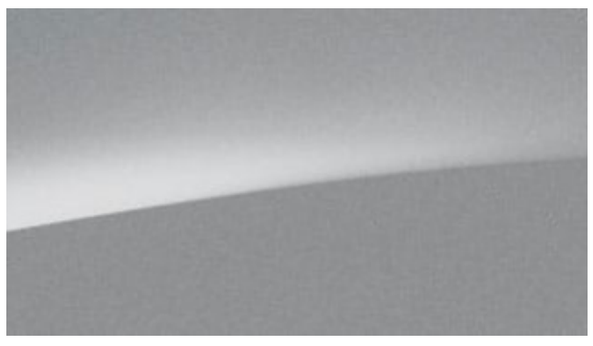

775U - Iridium SIlver

989U - Emerald Green

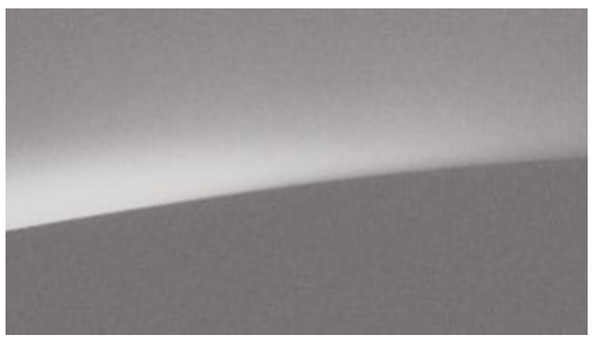

859U - Mojave Silver

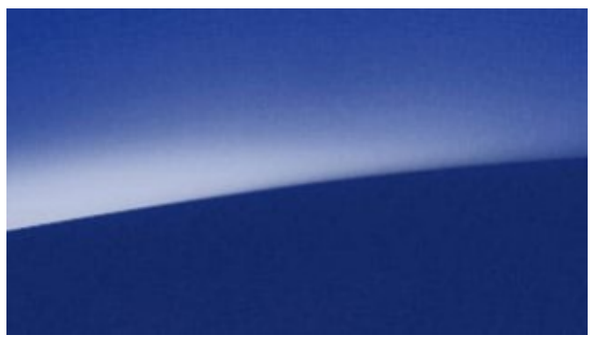

896U - Brilliant Blue

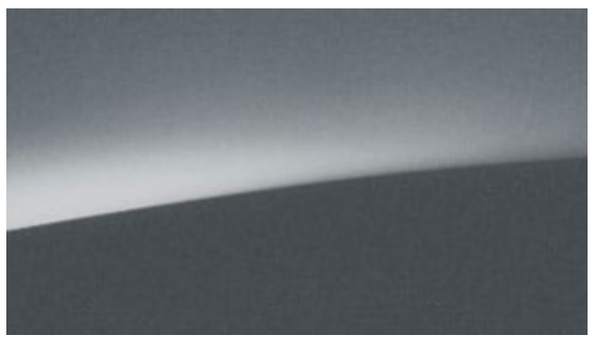

992U - Selenite Grey

designo Paints

799U - Diamond White Metallic

996U - Cardinal Red Metallic

Code	*Description*	*Availability*	*Price*
040U	Black	All Models	$0
149U	Polar White	All Models	$0
197U	Obsidian Black	All Models	$720 (GLE53W4) $0 (GLE63W4S)
890U	Lunar Blue	All Models	$720 (GLE53W4) $0 (GLE63W4S)
775U	Iridium SIlver	All Models	$720 (GLE53W4) $0 (GLE63W4S)
989U	Emerald Green	All Models	$720 (GLE53W4) $0 (GLE63W4S)
859U	Mojave Silver	All Models	$720 (GLE53W4) $0 (GLE63W4S)
896U	Brilliant Blue	All Models	$720 (GLE53W4) $0 (GLE63W4S)
992U	Selenite Grey	All Models	$720 (GLE53W4) $0 (GLE63W4S)
799U	Diamond White Metallic	All Models	$1,515 (GLE53W4) $795 (GLE63W4S)
996U	Cardinal Red Metallic	All Models	$1,080 (GLE53W4) $360 (GLE63W4S)

Wheels

9171 - 18" ARE-Y Graphite Metallic

18" x 8.5J
Steel
ET45 (5.0" Offset)
CB67.1 (2.64" Hub Bore)
[1]P215/45 R18 XL Bead Seat Outside
[1]P245/40 R18 XL Bead Seat Outside

9170 - 18" ARE-Y Graphite Metallic w/ Black Accents

18" x 8.5J
Steel
ET45 (5.0" Offset)
CB67.1 (2.64" Hub Bore)
[1]P215/45 R18 XL Bead Seat Outside
[1]P245/40 R18 XL Bead Seat Outside

9097 - 18" ARE-Y Polished Metallic

18" x 8.5J
Steel
ET45 (5.0" Offset)
CB67.1 (2.64" Hub Bore)
[1]P215/45 R18 XL Bead Seat Outside
[1]P245/40 R18 XL Bead Seat Outside

9000 - 17" ARE-Y Sport Graphite Metallic

17" x 8.5J
Steel
Standard ET45 (5.0" Offset)
CB67.1
[1]P215/45 R17 XL Bead Seat Outside
[1]P245/40 R17 XL Bead Seat Outside

9001 - 17" ARE-Y Sport Graphite Metallic w/ Black Accents

17" x 8.5J
Steel
Standard ET45 (5.0" Offset)
CB67.1
[1]P215/45 R17 XL Bead Seat Outside
[1]P245/40 R17 XL Bead Seat Outside

9002 - 17" ARE-Y Sport Polished Metallic

17" x 8.5J
Steel
Standard ET45 (5.0" Offset)
CB67.1
[1]P215/45 R17 XL Bead Seat Outside
[1]P245/40 R17 XL Bead Seat Outside

9004 - 17" Cross Spoke Forged Metallic

17" x 8.5J
Steel
Standard ET45 (5.0" Offset)
CB67.1
[1]P215/45 R17 XL Bead Seat Outside
[1]P245/40 R17 XL Bead Seat Outside

9003 - 17" Cross Spoke Forged Metallic Matte Black

17" x 8.5J
Steel
Standard ET45 (5.0" Offset)
CB67.1
[1]P215/45 R17 XL Bead Seat Outside
[1]P245/40 R17 XL Bead Seat Outside

Code	Wheel Size	Description	Wheel Dimensions	Availability	MSRP
9171	18"	ARE-Y Sport Graphite Metallic	18"DIA RIM 8J X 18"ET 45 Steel, [1]P215/45 R18 XL, [1]P245/40 R18 XL	STD, AMG	INCLUDED
9170	18"	ARE-Y Graphite Metallic w/ Black Accents	18"DIA RIM 8J X 18"ET 45 Steel, [1]P215/45 R18 XL, [1]P245/40 R18 XL	AMG Exclusive Option Group	$450
9097	18"	ARE-Y Polished Metallic	18"DIA RIM 8J X 18"ET 45 Steel, [1]P215/45 R18 XL, [1]P245/40 R18 XL	AMG Exclusive Option Group	$1,000
9000	17"	ARE-Y Sport Graphite Metallic	17"DIA RIM 8J X 17"ET 45 Steel, [1]P215/45 R17 XL, [1]P245/40 R17 XL	STD, AMG	INCLUDED
9001	17"	ARE-Y Sport Graphite Metallic w/ Black Accents	17"DIA RIM 8J X 17"ET 45 Steel, [1]P215/45 R17 XL, [1]P245/40 R17 XL	AMG Exclusive Option Group	$450
9002	17"	ARE-Y Sport Polished Metallic	17"DIA RIM 8J X 17"ET 45 Steel, [1]P215/45 R17 XL, [1]P245/40 R17 XL	AMG Exclusive Option Group	$1,000
9004	17"	ARE-Y Cross Spoke Forged Metallic	17"DIA RIM 8J X 17"ET 45 Steel, [1]P215/45 R17 XL, [1]P245/40 R17 XL	AMG Exclusive Option Group	$1,500
9003	17"	ARE-Y Cross Spoke Forged Metallic Matte Black	17"DIA RIM 8J X 17"ET 45 Steel, [1]P215/45 R17 XL, [1]P245/40 R17 XL	AMG Exclusive Option Group	$1,500

AUTHORS Author: 2021 Apple Macintosh Pro 28C 3.0 Mac Pro 12-Core HPE Gen10 Plus Xeon Gold 5220R, 2.2GHz, 24C, 165W, 128GB, 2933MHz, 2x 1TB SSD, 2x 10GbE, 2x 25GbE, 2x 100Gb, 2x 100Gb Ethernet, Apple Pro Display XDR - Standard Glass, Apple Pro Stand, Apple Pro Mouse, Apple Pro Keyboard, Apple Pro Cable Management Bracket, Apple Pro Power Cable - Canada, Apple Pro Ethernet Adapter (10-Gigabit RJ-45) - Mac Pro

Upholstery

MB Tex

651 - Black w/ Red Contrast Topstitching

Contains Y05 Red Seatbelts and U08 MB-Tex Upper Dash

Nappa Leather

851 - Black

Requires U09 MB-Tex Dashboard and Door Panels

854 - Tartufo Brown / Black

Requires U09 MB-Tex Dashboard and Door Panels

DELAYED

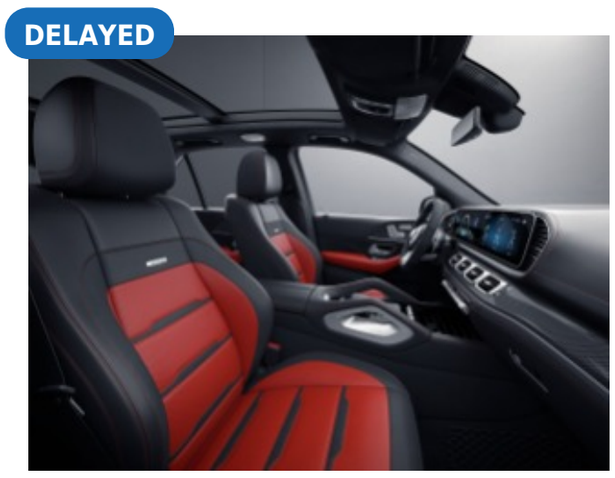

857 - Classic Red / Black

Requires U09 MB-Tex Dashboard and Door Panels

Exclusive Nappa Leather

551 - Black

Includes U38 Nappa Leather Dashboard and Door Panels

554 - Tartufo Brown / Black

Includes U38 Nappa Leather Dashboard and Door Panels

DELAYED

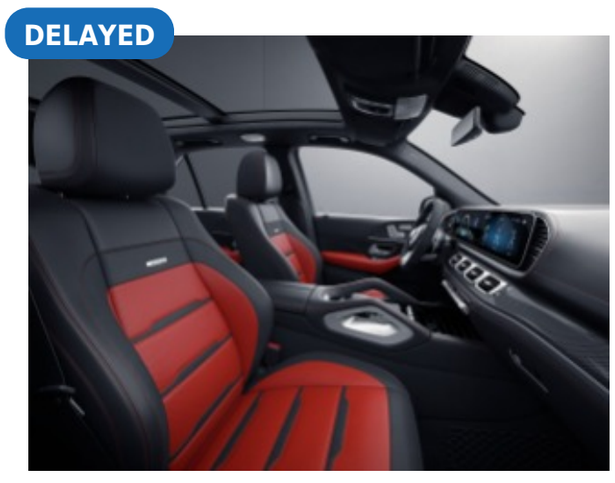

557 - Classic Red / Black

Includes U38 Nappa Leather Dashboard and Door Panels

561 - Black with Diamond Stitching

Includes U38 Nappa Leather Dashboard and Door Panels

565 - Macchiato Beige with Diamond Stitching

Includes U38 Nappa Leather Dashboard and Door Panels

571 - Black with Grey Accents

Includes U38 Nappa Leather Dashboard and Door Panels

Code	Description	Availability	Price
651	Black w/ Red Contrast Topstitching Contains Y05 Red Seatbelts and U08 MB-Tex Upper Dash	GLE53W4	$0
851	Black Requires U09 MB-Tex Dashboard and Door Panels	GLE53W4	$2,990
854	Tartufo Brown / Black Requires U09 MB-Tex Dashboard and Door Panels	GLE53W4	$2,990
857 (Delayed)	Classic Red / Black Requires U09 MB-Tex Dashboard and Door Panels	GLE53W4	$2,990
551	Black Includes U38 Nappa Leather Dashboard and Door Panels	All Models	$4,550 (GLE53W4) $0 (GLE63W4S)
554	Tartufo Brown / Black Includes U38 Nappa Leather Dashboard and Door Panels	All Models	$4,550 (GLE53W4) $0 (GLE63W4S)
557 (Delayed)	Classic Red / Black Includes U38 Nappa Leather Dashboard and Door Panels	All Models	$4,550 (GLE53W4) $0 (GLE63W4S)
561	Black with Diamond Stitching Includes U38 Nappa Leather Dashboard and Door Panels	All Models	$4,800 (GLE53W4) $250 (GLE63W4S)
565	Macchiato Beige with Diamond Stitching Includes U38 Nappa Leather Dashboard and Door Panels	All Models	$4,800 (GLE53W4) $250 (GLE63W4S)
571	Black with Grey Accents Includes U38 Nappa Leather Dashboard and Door Panels	GLE63W4S	$0

Code	Upholstery	Seats	Floor Mats	Upper Dash/Lower Dash	Seat Belts	Steering Wheel	Headliner
651	Black w/ Red Contrast Topstitching Contains Y05 Red Seatbelts and U08 MB-Tex Upper Dash	Black	Black	Black/Black	Red	Black	Black
851	Black Requires U09 MB-Tex Dashboard and Door Panels	Black	Black	Black/Black	Black	Black	Black
854	Tartufo Brown / Black Requires U09 MB-Tex Dashboard and Door Panels	Tartufo Brown/Black	Black	Black/Black	Black	Black	Black
857 (Delayed)	Classic Red / Black Requires U09 MB-Tex Dashboard and Door Panels	Classic Red/Black	Black	Black/Black	Black	Black	Black
551	Black Includes U38 Nappa Leather Dashboard and Door Panels	Black	Black	Black/Black	Black	Black	Black
554	Tartufo Brown / Black Includes U38 Nappa Leather Dashboard and Door Panels	Tartufo Brown/Black	Black	Black/Black	Black	Black	Black
557 (Delayed)	Classic Red / Black Includes U38 Nappa Leather Dashboard and Door Panels	Classic Red/Black	Black	Black/Black	Black	Black	Black
561	Black with Diamond Stitching Includes U38 Nappa Leather Dashboard and Door Panels	Black	Black	Black/Black	Black	Black	Black
565	Macchiato Beige with Diamond Stitching Includes U38 Nappa Leather Dashboard and Door Panels	Macchiato Beige	Black	Black/Macchiato Beige	Macchiato Beige	Black	Macchiato Beige
571	Black with Grey Accents Includes U38 Nappa Leather Dashboard and Door Panels	Black/Magma Grey	Black	Black/Black	Magma Grey	Black	Black

Trims

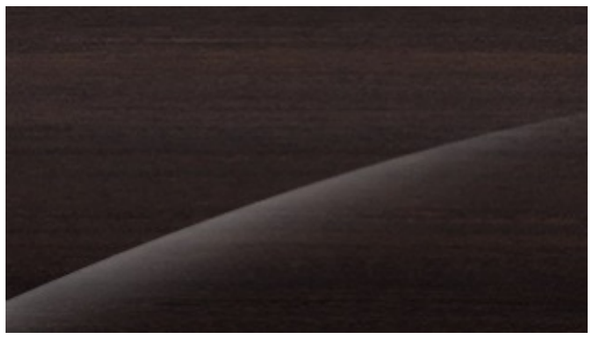

H18 - Dark Grey Linden Wood

H22 - Natural Grain Brown Walnut

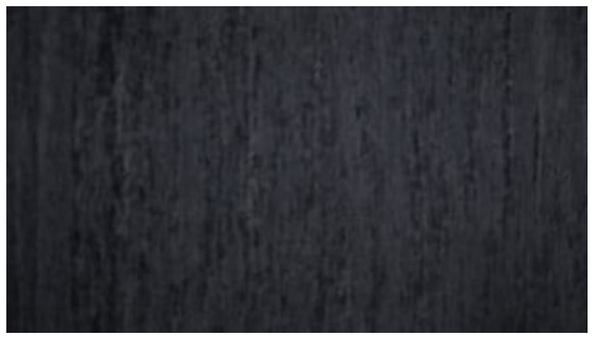

H31 - Natural Grain Grey Oak

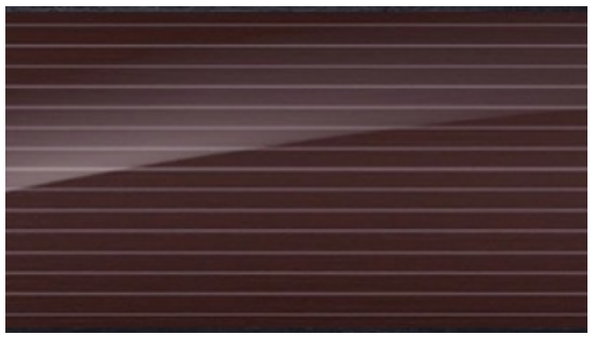

H34 - designo® Brown Linden Wood Flowing Lines

H35 - designo® Natural Grain Black Wood

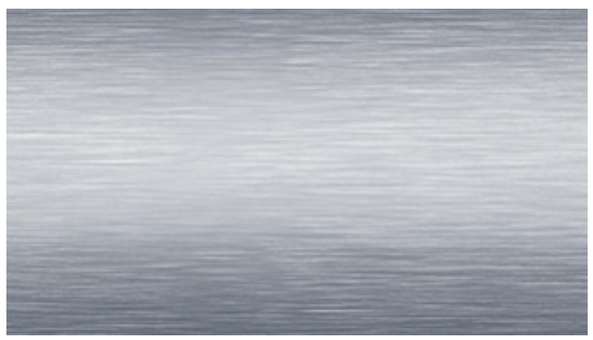

H46 - Brushed Aluminum

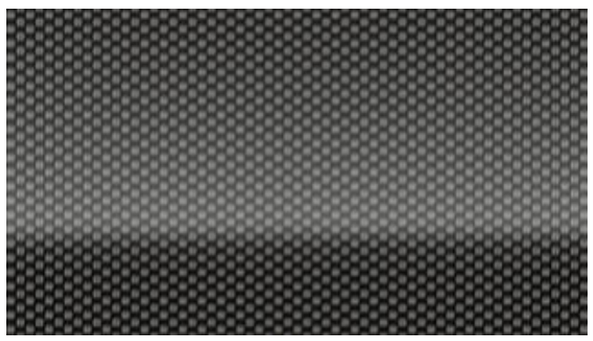

H64 - Metal Weave

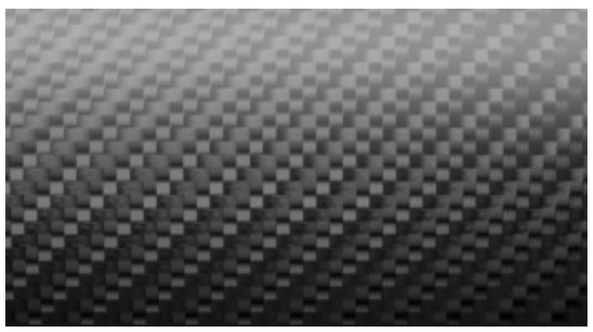

H86 - AMG Carbon Fiber

Code	*Description*	*Availability*	*Price*
H18	Dark Grey Linden Wood	All Models	$0
H22	Natural Grain Brown Walnut	All Models	$160 (GLE53W4) $0 (GLE63W4S)
H31	Natural Grain Grey Oak	All Models	$160 (GLE53W4) $0 (GLE63W4S)
H34	designo® Brown Linden Wood Flowing Lines	All Models	$850 (GLE53W4) $690 (GLE63W4S)
H35	designo® Natural Grain Black Wood	All Models	$850 (GLE53W4) $690 (GLE63W4S)
H46	Brushed Aluminum	All Models	$0
H64	Metal Weave	All Models	$600 (GLE53W4) $440 (GLE63W4S)
H86	AMG Carbon Fiber	All Models	$1,750

Packages

Code	Packages	Availability	MSRP
DA2PKG	Driver Assistance Package PLUS Requires Parking Assist Package (DA3PKG), Leather upholstery ■ P20 - Driver Assistance Package PLUS ○ Active Lane Keeping Assist ○ 233 - Active Distance Assist DISTRONIC® ○ Active Blind Spot Assist ○ Active Stop-and-Go Assist ○ Active Lane Change Assist ○ 266 - Active Steering Assist ○ Active Emergency Stop Assist ○ Route-Based Speed Adaptation ○ Active Brake Assist with Cross-Traffic Function ○ 546 - Active Speed Limit Assist ○ Evasive Steering Assist ○ 253 - PRE-SAFE® PLUS Rear End Collision Protection ○ 513 - Traffic Sign Assist	All Models	$1,950
DA3PKG	Parking Assistance Package ■ P47 - Parking Assist code ○ 501 - Surround View System	GLE53W4	$500
DA4PKG	Exterior Lighting Package ■ 608 - Adaptive Highbeam Assist ■ 640 - LED Intelligent Light System	GLE53W4	$900
DC1PKG	AMG Night Package ■ P60 - Night Package Code ○ WCO1 - Wheel Choice Of: ○ RXV - 22” AMG Cross-Spoke, Matte Black ○ RZW - 20” AMG 5-Spoke Wheels, Black ○ RWE - 21” AMG Twin 5-Spoke, Matte Black ○ Includes Trim on A-wing, Trim on rear apron, Tailpipes, Front Splitter, Window Frames, Heat-insulating dark-tinted glass, railing in High-Gloss Black	All Models	$750
DB0PKG	Warmth and Comfort Package ■ P68 - Warmth and Comfort Package code	All Models	$1,050
DB4PKG	3rd Row Seat Package Includes Tire fit (B51), Requires Passenger Seat Memory (P64) ■ 847 - 3rd Row Seat ■ 567 - Power 2nd Row Seat	GLE53W4	$2,100
DC5PKG	Acoustic Comfort Package ■ PAF - Acoustic Comfort Code ○ Increased Cabin Insulation, Windshield with Infrared-Reflecting film, Side Windows with Acoustic ○ Infrared Absorbing Film	All Models	$1,100
DB8PKG	ENERGIZING Comfort Package Plus Requires Premium Package (DP1PKG) and Warmth and Comfort Package (DB0PKG) ■ PBR - ENERGIZING Package Code ○ 399 - Multicontour Front Seats with Massage Function ○ P21 - AIR-BALANCE Package ○ 401 - Ventilated Front Seats	All Models	$2,100 (GLE53W4) $1,650 (GLE63W4S)
DC6PKG	Burmester High-End Surround Sound System Package (n/a with 77B MBUX Interior Assistant) ■ B51 - Tirefit ■ 811 - Burmester® High End 3D Surround Sound System	All Models	$4,550
DE6PKG	AMG DYNAMIC PLUS Package ■ 256 - AMG TRACK PACE ■ 465 - AMG ACTIVE RIDE CONTROL Suspension based on AMG RIDE CONTROL+ (Including eActive Roll Stabilization) ■ U88 - AMG DRIVE Unit ■ L6G - AMG Performance Steering Wheel in DINAMICA ■ U70 - AMG High Performance Braking System with Red Painted Brake Calipers	GLE53W4	$5,200

Options

Factory Options

Code	Options	Availability	MSRP
L6G	AMG Performance Steering Wheel in DINAMICA (requires U88 AMG Drive Unit, n/a with 443 Heated Steering Wheel)	All Models	$600 (GLE53W4) $100 (GLE63W4S)
L6J	AMG Performance Steering Wheel in Nappa Leather	All Models	$0
L6K	AMG Performance Steering Wheel in Nappa Leather/DINAMICA	All Models	$500 (GLE53W4) $0 (GLE63W4S)
P21	Air Balance Package	All Models	$350 (GLE53W4) $500 (GLE63W4S)
P64	Passenger Seat Memory	GLE53W4	$350
U09	MB-Tex Dashboard and Door Panels	GLE53W4	$350
U17	Omission of Color Seatbelts (replaces Y05)	All Models	$0
U19	Augmented Video	All Models	$350 (GLE53W4) $250 (GLE63W4S)
U29	AMG High-Performance Braking System (n/a with RZV, RZW, or RRP wheels)	GLE53W4	$2,500
U78	AMG Performance Exhaust System	GLE53W4	$1,250
U88	AMG Drive Unit (not available with 443 Heated Steering Wheel)	GLE53W4	$400
Y05	Red Seatbelts (only avail w 651, 851, 857, 551, or 557 upholsteries)	All Models	$0
256	AMG Track Pace	GLE53W4	$250
293	Rear Side Airbags	All Models	$700
297	Powered Rear Side-Window Sunshades	GLE53W4	$380
311	Heated and Cooled Cupholders	GLE53W4	$180
399	Multicontour Front Seats with Massage	All Models	$1,100
401	Heated and Ventilated Front Seats (n/a with 651 upholstery)	GLE53W4	$450
413	Panorama Sunroof	All Models	$1,000
443	Heated Steering Wheel (not available with U88 AMG Drive Unit or DE6 AMG DYNAMIC PLUS Package)	All Models	$250
463	HEAD UP DISPLAY (HUD)	All Models	$1,100 (GLE53W4) $0 (GLE63W4S)
513	Traffic Sign Assist	All Models	$295
550	Trailer Hitch	All Models	$575
581	4-Zone Climate Control	All Models	$860 (GLE53W4) $760 (GLE63W4S)
61U	Black DINAMICA Headliner	GLE53W4	$1,600
77B	Interior Assistant (not available with DC6 Burmester High End Surround Sound Package System)	All Models	$200
846	Brushed aluminum illuminated running boards	All Models	$650
872	Heated Rear Seats	All Models	$580
875	Heated Windshield Washer System	GLE53W4	$200
883	Soft Close Doors	All Models	$550
902	Rapid Seat Heating	All Models	$450
B07 (Delayed)	AMG High-Performance Ceramic Compound Braking System	GLE63W4S	$5,450
B14	Carbon Fiber Engine Cover	GLE63W4S	$1,600
L6H	AMG Perfroming Steering Wheel in Carbon Fiber/ DINAMICA	GLE63W4S	$400
Y04	Silver Seatbelts	GLE63W4S	$0
567	Power Second Row	GLE63W4S	$1,200

VPC Installed Options

Code	Options	Availability	MSRP
D03	Illuminated Star (n/a with DA2 Drivers Assistance Package)	All Models	$500
D07	Wheel Locking Bolts	All Models	$150
D08	Chrome Door Handle Inserts	All Models	$100
D24	Side Body Cladding, Black	GLE53W4	$450
D26	Chrome Load Sill Guard	GLE53W4	$150
D14	Chrome Door Fin Cover	GLE63W4S	$160

Specifications

GLE53W4

Chassis	
Drivetrain	
Transmission	AMG SPEEDSHIFT TCT 9-speed automatic transmission
Drive Configuration	All-wheel drive
Engine	
Engine Configuration	AMG-Enhanced 3.0L I6 Turbo Engine
ICE Power (hp)	429 hp
Torque (lb-ft)	384 lb-ft
Compression Ratio	10.5 : 1
Fuel Requirement (Octane)	91
Fuel Tank Size (gallons)	22.5
Displacement (cc)	2,999
Performance	
Acceleration 0-60pmg (sec)	5.2
Top Speed (mph)	155(icw R01)
Transmission Speeds	9
Electric Motor (hp), System Output (hp)	21
Electric Motor (lb-ft), System Torque (lb-ft)	184
Maximum Load (lbs)	TBD
Towing Capacity (lbs)	7,700 lbs
Fuel Economy	
City Fuel Economy	TBD
Highway Fuel Economy	TBD
Emission Certification	TBD
Exterior Dimensions	
Vehicle Length (in.)	194.4
Vehicle Height (in.)	70.2
Vehicle Width w/ exterior mirrors (in.)	84.9
Wheelbase (in.)	117.9
Curb Weight (lbs)	TBD
Track Width Front/Rear (in.)	66.18/67.91
Interior Dimensions	
Cargo Capacity	TBA
Trunk Size	TBA

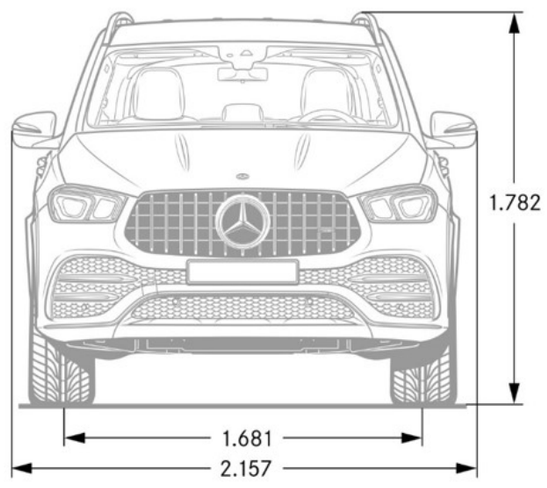

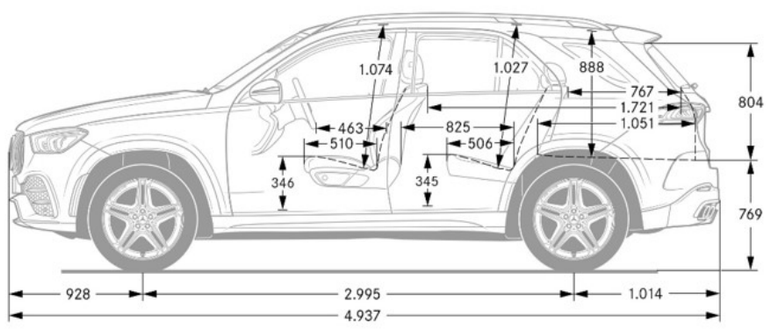

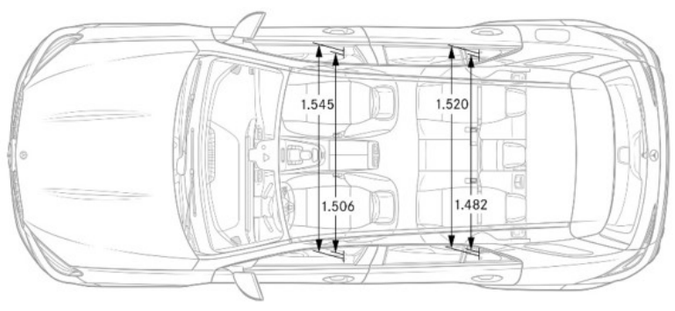

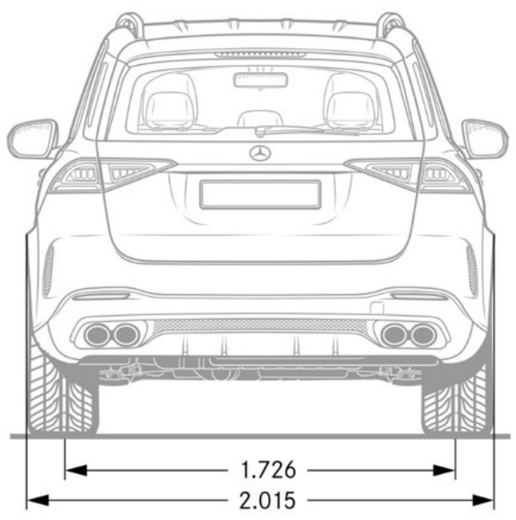

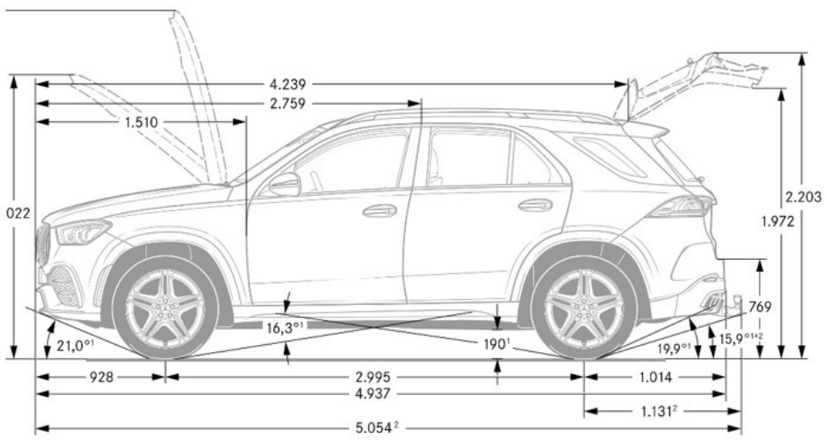

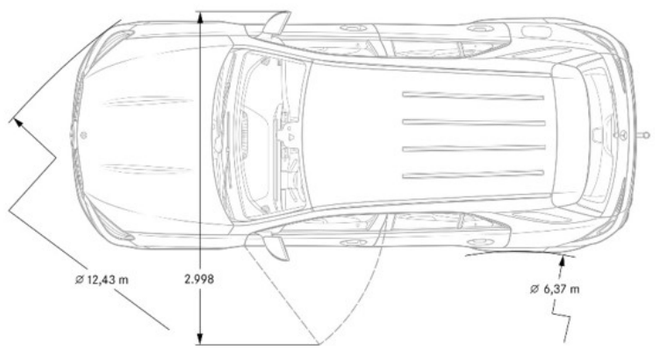

GLE63W4S

Chassis	
Drivetrain	
Transmission	AMG SPEEDSHIFT TCT 9-speed automatic transmission
Drive Configuration	All-wheel drive
Engine	
Engine Configuration	Handcrafted AMG 4.0L V8 Bi-Turbo Engine
ICE Power (hp)	603 hp
Torque (lb-ft)	627 lb-ft
Compression Ratio	10.5 : 1
Fuel Requirement (Octane)	91
Fuel Tank Size (gallons)	22.5
Displacement (cc)	3,982
Performance	
Acceleration 0-60pmg (sec)	3.7
Top Speed (mph)	174
Transmission Speeds	9
Electric Motor (hp), System Output (hp)	21
Electric Motor (lb-ft), System Torque (lb-ft)	184
Maximum Load (lbs)	TBD
Towing Capacity (lbs)	7,700 lbs
Fuel Economy	
City Fuel Economy	TBD
Highway Fuel Economy	TBD
Emission Certification	TBD
Exterior Dimensions	
Vehicle Length (in.)	190
Vehicle Height (in.)	70.2
Vehicle Width w/ exterior mirrors (in.)	84.9
Wheelbase (in.)	117.9
Curb Weight (lbs)	TBD
Track Width Front/Rear (in.)	66.65/67.72
Interior Dimensions	
Cargo Capacity	TBA
Trunk Size	TBA

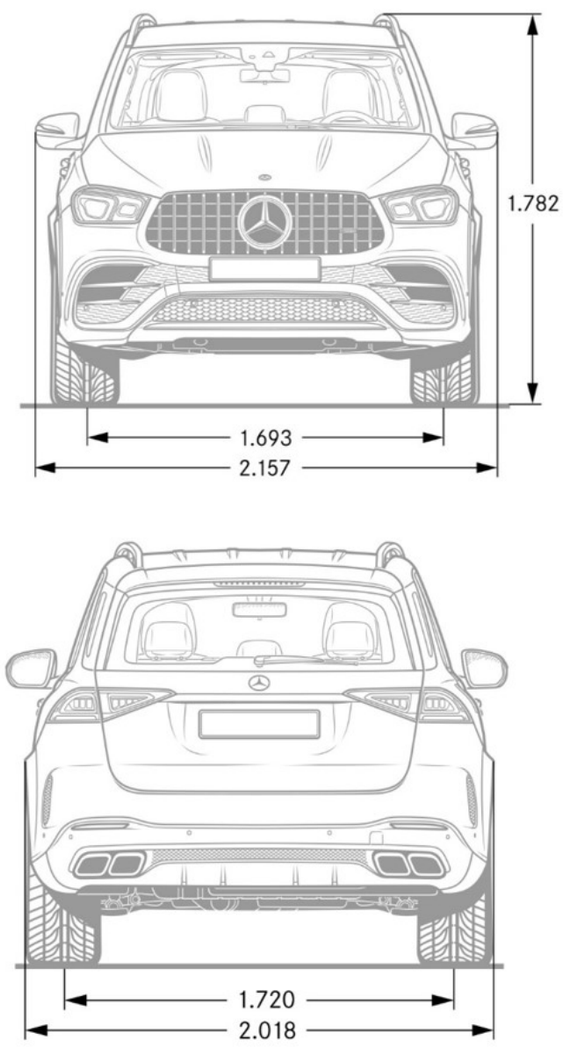

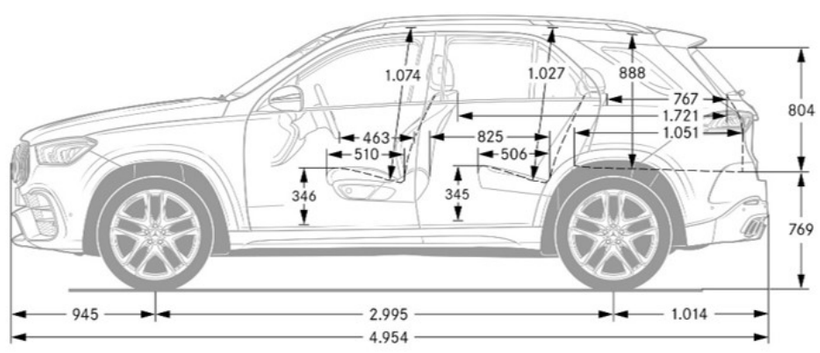

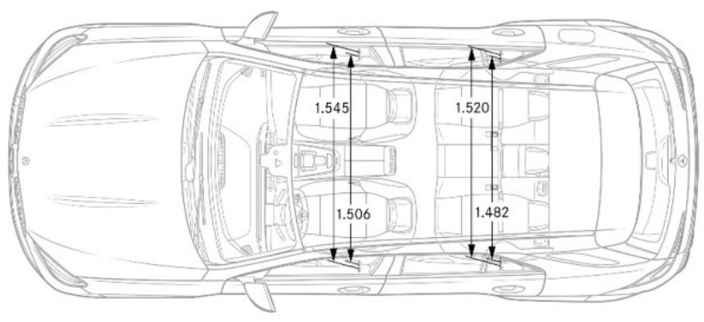

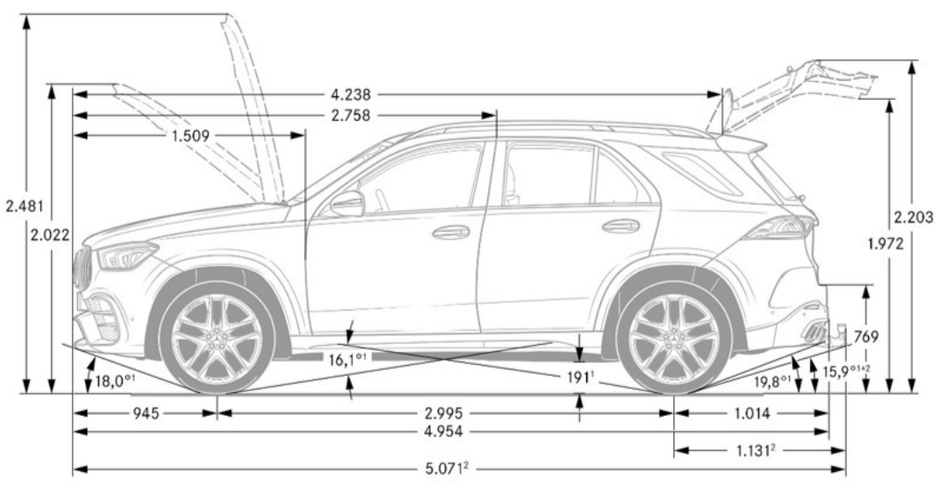

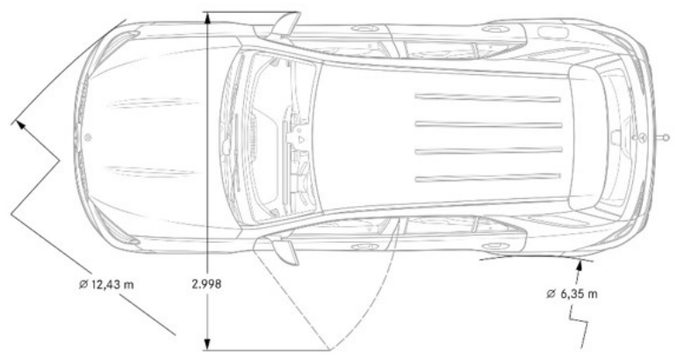

Options In Detail

Headlamps

LED Headlamps (632)

Standard

- Excellent illumination of the road.
- Unmistakable look by day or night
- Long operating life
- Color spectrum close to natural daylight
- Low energy consumption

LED Intelligent Light System w/ Ultra Range Highbeam

Optional $900
Requires Advanced Lighting Package (DA4PKG)

- Advanced LED headlamps and Ultra Range Highbeams
- Ultra Range Highbeam produce light at an increased range for maximum illumination of the road and surround area
- Adaptive Highbeam Assist is also part of the LED Intelligent Light System and allows drivers to drive with activated main beams without dazzling other motorists or pedestrians

AMG Performance Exhaust System

AMG Performance Exhaust System (U78)

Option price GLE 53 : $1,250

- Stronger differentiation of the sound characteristics by means of two additional exhaust flaps
- Sound characteristics dependent on selected drive program – clear differentiation between rich in drive programs "C" and "S" and emphatically sporty in drive programs "S+" and "Race" ("Race" mode on GLE 63 S 0nly)
- Additional control of the sound characteristics by means of a button in the middle control panel of the center console
- Control by means of variably adjustable exhaust flaps – without loss of power
- Control of the exhaust gas flaps is dependent on both engine speed and load, ensuring 100% power delivery
- Double declutching (in "S") and a misfire (in "S+" and "Race" emphasize the sporty characteristics of the particular drive programs ("Race" mode on GLE 63 S 0nly)

Steering Wheel

AMG Performance Steering Wheel in Black Nappa Leather (L6J)

- Sporty 3-spoke design with flattened lower section and perforated grip area, completely finished in black Nappa Leather with 12'o clock marking and topstitching.
- Steering wheel spokes and trim in silver chrome with 'AMG' lettering and silver colored aluminum shift paddles.

AMG Performance Steering Wheel in Nappa Leather /DINAMICA (L6K)

- Sporty 3-spoke design with flattened lower section, combined version in Nappa Leather with black DINAMICA microfiber in the grip area with 12'o clock marking and topstitching.
- Steering wheel spokes and trim in silver chrome with 'AMG' lettering and silver colored aluminum shift paddles.

AMG Performance Steering Wheel in DINAMICA (L6G)

- Includes U88 AMG Drive Unit
- Cannot be combined with 443 Heated Steering Wheel
- Sporty 3-spoke design with flattened lower section, completely finished in DINAMICA microfiber in black with 12'o clock marking and topstitching.
- Steering wheel spokes and trim in silver chrome with 'AMG' lettering and silver colored aluminum shift paddles.

AMG Performance Steering Wheel in Carbon Fiber / DINAMICA (L6H)

GLE 63 S only: only i.c.w. H86 Carbon Fiber Trim, H31 Natural Grain Grey Oak, or H35 designo® Black Flamed Open-Pore Ash Wood

- Sporty 3-spoke design with flattened lower section, combined version in high-gloss carbon fiber and black DINAMICA microfiber in the grip area with 12'o clock marking and topstitching.
- Steering wheel spokes and trim in silver chrome with 'AMG' lettering and silver colored aluminum shift paddles.

U88 AMG Drive Unit steering wheel buttons

AMG Drive Unit steering wheel buttons

Standard on GLE 63 S Option Price GLE 53 : $400

- When U88 is selected, the AMG Performance Steering Wheel is equipped with a round controller with an integral display beneath the right-hand steering wheel spoke, plus two vertically positioned color display buttons beneath the left-hand steering-wheel spoke
- The round display allows for easy adjustment of the AMG DYNAMIC SELECT Drive Mode
- The vertically-mounted displays offer a configurable hot-key to adjust two key parameters, i.e. a switch to Manual transmission mode (or to Automatic shifting) or a switch from the Comfort exhaust setting to the more emotional Sport setting
- These buttons allow the driver to concentrate fully on dynamic driving without having to take their hands off the wheel in order to change performance-oriented vehicle settings

Please note, that when equipped with 443 Heated Steering Wheel, the AMG Drive Unit Steering Wheel Buttons are unable to be equipped.

Brakes

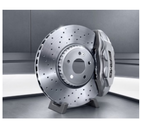

AMG High Performance Braking System

Standard on GLE 53 2-piston front and 1-piston rear calipers

- Front axle: brake disc measuring 15.75 inch, internally ventilated and perforated with 2-piston fixed caliper
- Rear axle: brake discs measuring 13.58 inch, internally ventilated, with single-piston floating caliper
- Silver-painted brake calipers with black AMG lettering

AMG High Performance Braking System (U29)

Optional on GLE 53 (n/a with RZV, RZW, RRP wheels) 6-piston front and 1-piston rear calipers

- Front axle: brake disc measuring 15.75 inch, internally ventilated and perforated with 6-piston fixed caliper
- Rear axle: brake discs measuring 14.57 inch, internally ventilated, with single-piston floating caliper
- Silver-painted brake calipers with white AMG lettering

AMG High-Performance Composite Braking System (U70)

Standard on GLE 63 S

Gallery